Bulletin No. 596-B

Humidification Solution Source

ELECTRIC

GAS

STEAM

COMPRESSED AIR

Armstrong

COMPRESSED AIR

ARMSTRONG-COOL FOG SYSTEMS

Fogging systems offer energy-efficient, environmentally safe and economical ways to control injection of compressed air and water into air handling systems that provide humidity and evaporative cooling. Combining Armstrong's decades of humidification leadership with the fogging system expertise of the former Cool Fog Systems Inc., Armstrong-Cool Fog products integrate easily with almost any system, whether your air handler is VAV, constant volume or airside economizer.

ELECTRIC

HUMIDICLEAN™ SERIES HC-6000 HUMIDIFIER WITH IONIC BED TECHNOLOGY™

The HumidiClean™ electric humidifier includes disposable inserts made of a fibrous medium. Called ionic beds, these devices attract solids from the boiling water, preventing the solids from plating out on the heating elements or on the tank walls. Tank cleaning is minimized, and effective service life is extended.

SERIES EHU-700 ELECTRIC STEAM HUMIDIFIER

No other electric humidifier does a better job of stabilizing and simplifying humidity control. Only Armstrong offers full modulation and a patented self-regulating maximum output feature. When you install an Armstrong Series EHU-700 you get accurate, automatically adjusted humidity control that's virtually hands-free.

HumidiClean™ with Ionic Beds

EHU-700

STEAM

SERIES 9000 HUMIDIFIER

The Series 9000 direct steam injection humidifier provides precisely controlled, trouble-free steam humidification. These units distribute steam and give you precise control to accurately maintain the required level of relative humidity. Available in a range of selections to meet various capacity requirements, Series 9000 units offer uniform vapor distribution and rapid, complete absorption. They maintain quiet operation and require minimal maintenance.

SERIES 1000 ALL STAINLESS STEEL HUMIDIFIER

A steam separator type humidifier for use in sensitive environments where pure, demineralized, deionized or distilled water is used to generate clean steam. Designed for applications where all steam and condensate piping is stainless steel, the Armstrong Series 1000 delivers precisely controlled, trouble-free steam humidification. Stainless steel construction prevents problems caused by corrosion and subsequent carry-over of corrosion by-products.

STEAM-TO-STEAM HUMIDIFIER

Steam-to-steam devices in the CS Series use boiler steam to produce chemical free steam from untreated water. Easy to install and simple to clean, Armstrong steam-to-steam humidifiers have all the benefits of steam humidification without the concern of boiler treatment carry-over.

STEAM-TO-STEAM WITH IONIC BED TECHNOLOGY

This steam-to-steam device has all the benefits of Armstrong steam-to-steam humidifiers – easy to install, simple to clean – plus the innovative Ionic Bed Technology™ at the heart of all HumidiClean humidifiers.

Series 9000

Model CS-15CB Steam-to-Steam

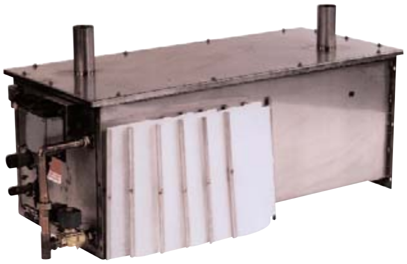

Model CS-13CB Steam-to-Steam with Ionic Beds

Series 1000

Table of Contents

Table 4-1. Armstrong Humidification Selection Guide

	Central Steam Available				Central Steam Not Available				
	No Chemical Concern with Plant Steam	Concern with Chemicals <800 lb/hr Capacity	Concern with Chemicals >800 lb/hr Capacity	Steam From DI Source	Hard Water Used. Minimal Maintenance.	Tap Water Used. Price More Critical Than Performance	DI Water Used (Electrical Units)	Gas Preferred. Tap Water or DI <475 pph capacity. Non-critical control.	Low Maintenance. Low Operating Costs. Evaporative cooling desired.
Air Handling System Application w/Critical Vapor Trail	C	D/L	E/C	C	F/L	G/L	F/L	H/L	—
Air Handling System Application w/Non-Critical Vapor Trail	A/J	D/K/O	E/A/J	B/J	F/K/O	G/K/O	F/K/O	H/K/O	I
Direct Area Discharge	A/M	D/M	E/A/M	B/M	F/M	G/M	F/M	H/M	I

Humidifier Type Key

A. Series 9000 Direct Steam Injection Humidifier
B. Series 1000 Direct Steam Injection Humidifier
C. HumidiPack/HumidiPack Plus/HumidiPack CF System w/Control Valve, Trap(s), Strainer
D. Series CS-10 Steam-to-Steam Humidifier
E. Armstrong Unfired Steam Generator
F. Series HC-6000 HumidiClean Electronic Humidifier
G. Series EHU-700 Electrode Type Electronic Humidifier
H. Gas Fired HumidiClean
I. Armstrong Cool-Fog

Dispersion Type

J. SS Jacketed Manifold or aluminum SteamStik™ jacketed manifolds
K. SS Non-Jacketed Dispersion Tube
L. HumidiPack Distribution Panel (Only)
M. Fan Type Dispersion
N. Venturi Nozzle Type Dispersion
O. Steam Jacketed Dispersion Tube (SJDT)

Critical Vapor Trail includes requirements <3 feet

Humidification Plays an Essential Role

Although humidity is invisible to our eyes, we can easily observe its effects. In human terms, we are more comfortable and more efficient with proper humidification. In business and industrial environments, the performance of equipment and materials is enhanced by effectively applying humidity control.

Maintaining indoor air quality through humidity management can lower energy costs, increase productivity, save labor and maintenance costs, and ensure product quality. In short, humidification can provide a better environment and improve the quality of life and work.

Armstrong has been sharing know-how in humidification application since 1938. Through the design, manufacturing, and application of humidification equipment Armstrong has led the way to countless savings in energy, time and money. Armstrong also provides humidification sizing and selection software, videotapes, and other educational materials to aid in humidification equipment selection, sizing, installation, and maintenance.

Armstrong offers this updated Humidification Engineering section as a problem-solving, educational aid for those involved with the design, installation, and maintenance of environmental control systems in all types of buildings. In addition, you may request a free copy of Armstrong's Humid-A-ware™ Humidification Sizing and Selection Software for step-by-step sizing of your own installation. It can also be downloaded by accessing www.armstrong-intl.com.

Your specific humidification questions can be answered by your Armstrong Representative. Additional support from Armstrong International humidification specialists is available to assist with difficult or unusual applications.

Controlled humidification helps protect humidity-sensitive materials, personnel, delicate machinery, and equipment. Beyond the important issues of comfort and process control, humidity control can help safeguard against explosive atmospheres. You can't afford NOT to humidify. And the best way to protect your investment is through proven humidification strategies and solutions pioneered by Armstrong.

Inside the Humidification Engineering Section...

References

ASHRAE Handbook, 2000 Systems and Equipment.

ASHRAE Handbook, 2002 Fundamentals.

ASHRAE Handbook, 1999 HVAC Applications.

IBM Installation Planning Manual, April, 1973.

Obert, Edward F. Thermodynamics, 1948.

Static Electricity, National Fire Protection Association. 1941.
U.S. National Bureau of Standards.

IMPORTANT: This section is intended to summarize general principles of installation and operation. Actual installation and operation should be performed only by experienced personnel. Selection or installation should always be accompanied by competent technical assistance or advice. This data should never be used as a substitute for such technical advice or assistance. We encourage you to contact Armstrong or its local representative for further details.

Why Humidification is Important

Glossary

Relative Humidity(RH):

The ratio of the vapor pressure (or mole fraction) of water vapor in the air to the vapor pressure (or mole fraction) of saturated air at the same dry-bulb temperature and pressure.

Sensible Heat:

Heat that when added to or taken away from a substance causes a change in temperature or, in other words, is “sensed” by a thermometer. Measured in Btu.

Latent Heat:

Heat that when added to or taken away from a substance causes or accompanies a phase change for that substance. This heat does not register on a thermometer, hence its name “latent” or hidden. Measured in Btu.

Dew Point:

The temperature at which condensation occurs (100%RH) when air is cooled at a constant pressure without adding or taking away water vapor.

Evaporative Cooling:

A process in which liquid water is evaporated into air. The liquid absorbs the heat necessary for the evaporation process from the air, thus, there is a reduction in air temperature and an increase in the actual water vapor content of the air.

Enthalpy:

Also called heat content, this is the sum of the internal energy and the product of the volume times the pressure. Measured in Btu/lb.

Hygroscopic Materials:

Materials capable of absorbing or giving up moisture.

Phase:

The states of existence for a substance, solid, liquid, or gas (vapor).

Humidification is simply the addition of water to air. However, humidity exerts a powerful influence on environmental and physiological factors. Improper humidity levels (either too high or too low) can cause discomfort for people, and can damage many kinds of equipment and materials. Conversely, the proper type of humidification equipment and controls can help you achieve effective, economical, and trouble-free control of humidity.

As we consider the importance of humidity among other environmental factors—temperature, cleanliness, air movement, and thermal radiation—it is important to remember that humidity is perhaps the least evident to human perception. Most of us will recognize and react more quickly to temperature changes, odors or heavy dust in the air, drafts, or radiant heat. Since relative humidity interrelates with these variables, it becomes a vital ingredient in total environmental control.

Humidity and Temperature

Humidity is water vapor or moisture content always present in the air. Humidity is definable as an absolute measure: the amount of water vapor in a unit of air. But this measure of humidity does not indicate how dry or damp the air is. This can only be done by computing the ratio of the actual partial vapor pressure to the saturated partial vapor pressure at the same temperature. This is relative humidity, expressed by the formula:

$$RH = \frac{vp_a}{vp_s}\Bigg|_t$$

vp_a = actual vapor pressure
vp_s = vapor pressure at saturation
t = dry-bulb temperature

For practical purposes, at temperatures and pressures normally encountered in building systems, relative humidity is considered as the amount of water vapor in the air compared to the amount the air can hold at a given temperature.

“At a given temperature” is the key to understanding relative humidity. Warm air has the capacity to hold more moisture than cold air. For example, 10,000 cubic feet of 70°F air can hold 80,550 grains of moisture. The same 10,000 cubic feet of air at 10°F can hold only 7,760 grains of moisture.

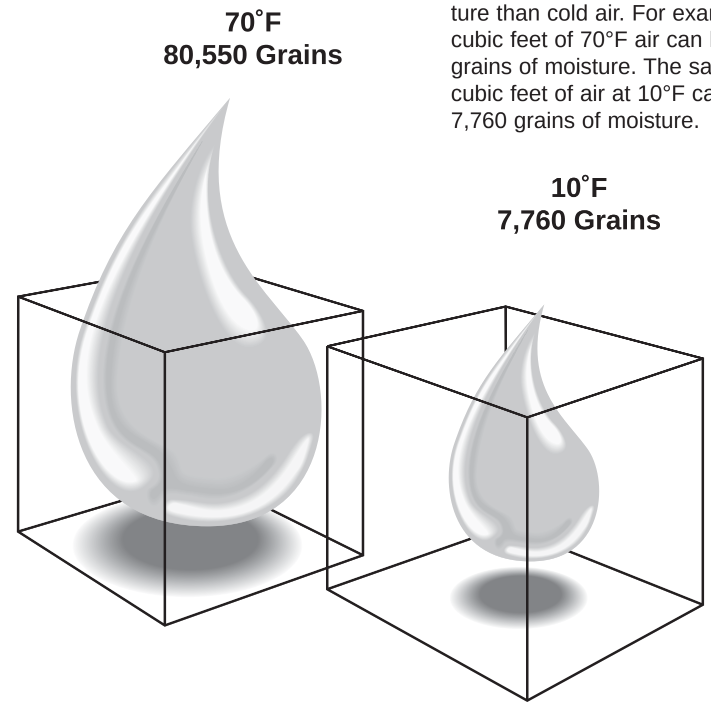

If the 10,000 cubic feet of 10°F air held 5,820 grains of moisture, its relative humidity would be 75%. If your heating system raises the temperature of this air to 70°F with no moisture added, it will still contain 5,820 grains of moisture. However, at 70°F, 10,000 cubic feet of air can hold 80,550 grains of moisture. So the 5,820 grains it actually holds give it a relative humidity of slightly more than 7%. That’s very dry...drier than the Sahara Desert.

Air Movement and Humidity

Another variable, air movement in the form of infiltration and exfiltration from the building, influences the relationship between temperature and relative humidity. Typically, one to three times every hour (and many more times with forced air make-up or exhaust) cold outdoor air replaces your indoor air. Your heating system heats this cold, moist outdoor air, producing warm, dry indoor air.

Evaporative Cooling

We've discussed the effects of changing temperature on relative humidity. Altering RH can also cause temperature to change. For every pound of moisture evaporated by the air, the heat of vaporization reduces the sensible heat in the air by about 1,000 Btu. This can be moisture absorbed from people or from wood, paper, textiles, and other hygroscopic material in the building. Conversely, if hygroscopic materials absorb moisture from humid air, the heat of vaporization can be released to the air, raising the sensible heat.

Dew Point

Condensation will form on windows whenever the temperature of the glass surface is below the dew point of the air. Table 7-2, from data presented in the ASHRAE Systems and Equipment Handbook, indicates combinations of indoor relative humidity and outside temperature at which condensation will form. Induction units, commonly used below windows in modern buildings to blow heated air across the glass, permit carrying higher relative humidities without visible condensation.

Table 7-2. Relative Humidities at Which Condensation Will Appear on Windows at 74°F When Glass Surface Is Unheated

Outdoor Temperature	Single Glazing	Double Glazing
40	39%	59%
30	29%	50%
20	21%	43%
10	15%	36%
0	10%	30%
-10	7%	26%
-20	5%	21%
-30	3%	17%

Table 7-1. Grains of Water per Cubic Foot of Saturated Air and per Pound of Dry Air at Various Temperatures.
(Abstracted from ASHRAE Handbook)

°F	Per cu ft	Per lb Dry Air	°F	Per cu ft	Per lb Dry Air	°F	Per cu ft	Per lb Dry Air	°F	Per cu ft	Per lb Dry Air
-10	0.28466	3.2186	50	4.106	53.38	78	10.38	145.3	106	23.60	364.0
-5	0.36917	4.2210	51	4.255	55.45	79	10.71	150.3	107	24.26	375.8
0	0.47500	5.5000	52	4.407	57.58	80	11.04	155.5	108	24.93	387.9
5	0.609	7.12	53	4.561	59.74	81	11.39	160.9	109	25.62	400.3
10	0.776	9.18	54	4.722	61.99	82	11.75	166.4	110	26.34	413.3
15	0.984	11.77	55	4.889	64.34	83	12.11	172.1	111	27.07	426.4
20	1.242	15.01	56	5.060	66.75	84	12.49	178.0	112	27.81	440.4
25	1.558	19.05	57	5.234	69.23	85	12.87	184.0	113	28.57	454.5
30	1.946	24.07	58	5.415	71.82	86	13.27	190.3	114	29.34	469.0
31	2.033	25.21	59	5.602	74.48	87	13.67	196.7	115	30.13	483.9
32	2.124	26.40	60	5.795	77.21	88	14.08	203.3	120	34.38	566.5
33	2.203	27.52	61	5.993	80.08	89	14.51	210.1	125	39.13	662.6
34	2.288	28.66	62	6.196	83.02	90	14.94	217.1	130	44.41	774.9
35	2.376	29.83	63	6.407	86.03	91	15.39	224.4	135	50.30	907.9
36	2.469	31.07	64	6.622	89.18	92	15.84	231.8	140	56.81	1064.7
37	2.563	32.33	65	6.845	92.40	93	16.31	239.5	145	64.04	1250.9
38	2.660	33.62	66	7.074	95.76	94	16.79	247.5	150	71.99	1473.5
39	2.760	34.97	67	7.308	99.19	95	17.28	255.6	155	80.77	1743.0
40	2.863	36.36	68	7.571	102.8	96	17.80	264.0	160	90.43	2072.7
41	2.970	37.80	69	7.798	106.4	97	18.31	272.7	165	101.0	2480.8
42	3.081	39.31	70	8.055	110.2	98	18.85	281.7	170	112.6	2996.0
43	3.196	40.88	71	8.319	114.2	99	19.39	290.9	175	125.4	3664.5
44	3.315	42.48	72	8.588	118.2	100	19.95	300.5	180	139.2	4550.7
45	3.436	44.14	73	8.867	122.4	101	20.52	310.3	185	154.3	5780.6
46	3.562	45.87	74	9.153	126.6	102	21.11	320.4	190	170.7	7581.0
47	3.692	47.66	75	9.448	131.1	103	21.71	330.8	195	188.6	10493.0
48	3.826	49.50	76	9.749	135.7	104	22.32	341.5	200	207.9	15827.0
49	3.964	51.42	77	10.06	140.4	105	22.95	352.6			

Why Humidification is Important, continued…

Energy Conservation With Controlled RH

Indoor relative humidity as we have computed it is called Theoretical Indoor Relative Humidity (TIRH). It virtually never exists. RH observed on a measuring device known as a hygrometer will almost always exceed the TIRH. Why? Dry air is thirsty air. It seeks to draw moisture from any source it can. Thus it will soak up moisture from any hygroscopic materials (such as wood, paper, foodstuffs, leather, etc.) and dry out the nasal passages and skin of human beings in the building.

But is this free “humidification”? No, it is the most expensive kind there is when translated into terms of human comfort, material deterioration, and production difficulties. Moreover, it requires the same amount of energy whether the moisture is absorbed from people and materials or added to the air by an efficient humidification system.

The true energy required for a humidification system is calculated from what the actual humidity level will be in the building, NOT from the theoretical level. In virtually all cases, the cost of controlling RH at the desired level will be nominal in terms of additional energy load, and in some cases may result in reduced energy consumption.

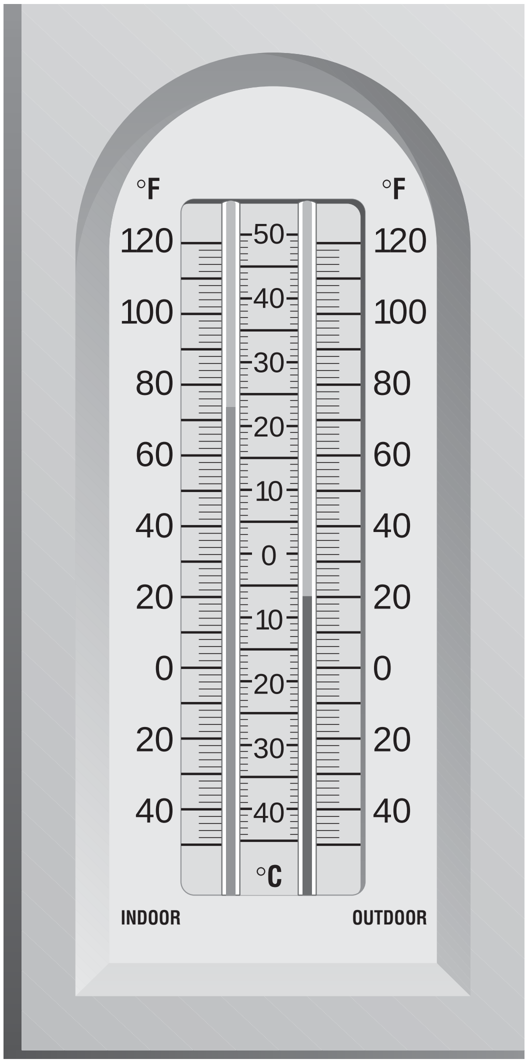

A major convention center in the Central United States reported that it experienced a decrease in overall steam consumption when it added steam humidification. From one heating season with no humidification to the next with humidifiers operating, the steam consumption for humidification was 1,803,000 lbs, while the steam for heating decreased by 2,486,000 lbs in the same period. The decreased (metered) consumption occurred despite 7.2% colder weather from the previous year. The records from this installation indicate that it is possible to reduce the total amount of steam required for environmental control by maintaining a higher, controlled relative humidity.

Let’s examine a theoretical system using enthalpy (heat content) as our base.

- Assume a winter day with outside temperature of 0°F at 75% RH.
- The enthalpy of the air is .6 Btu/lb dry air (DA).
- If the air is heated to 72°F without adding moisture, the enthalpy becomes 18 Btu/lb DA.
- Theoretical relative humidity becomes 3.75%, but actual RH will be about 25%.
- At 72°F and 25% RH the enthalpy is 22 Btu/lb DA.
- The additional moisture is derived from hygroscopic materials and people in the area.

But what about the additional energy — the difference between the 18 Btu/lb DA and 22 Btu/lb DA? This 22% increase must come from the heating system to compensate for the evaporative cooling effect. If a humidification system is used and moisture added to achieve a comfortable 35% RH, the enthalpy is 23.6 Btu/lb DA.

This is only a 7% increase over the “inevitable” energy load of 22 Btu/lb DA—substantially less than the theoretical increase of 31% from 3.75% RH (18 Btu/lb DA) to 35% RH (23.6 Btu/lb DA) at 72°F. If the temperature was only 68°F at 35% RH (because people can be comfortable at a lower temperature with higher humidity levels), the enthalpy is 21.8 Btu/lb DA, or a slight decrease in energy.

Problems With Dry Air

Dry air can cause a variety of costly, troublesome, and sometimes dangerous problems. If you are not familiar with the effects of dry air, the cause of these problems may not be obvious. You should be concerned if you are processing or handling hygroscopic materials such as wood, paper, textile fibers, leather, or chemicals. Dry air and/or fluctuating humidity can cause serious production problems and/or material deterioration.

Static electricity can accumulate in dry atmospheric conditions and interfere with efficient operation of production machinery or electronic office machines. Where static-prone materials such as paper, films, computer disks, and other plastics are handled, dry air intensely aggravates the static problem. In potentially explosive atmospheres, dry air and its resultant static electricity accumulations can be extremely dangerous.

Humidity and Human Comfort

Studies indicate people are generally most comfortable when relative humidity is maintained between 35% and 55%. When air is dry, moisture evaporates more readily from the skin, producing a feeling of chilliness even with temperatures of 75°F or more. Because human perception of RH is often sensed as temperature differential, it's possible to achieve comfortable conditions with proper humidity control at lower temperatures. The savings in heating costs are typically very significant over the course of just a single heating season.

The Need for Humidity Control in Today's Electronic Workplace

Electronics are revolutionizing the way your office and plant floor operates, communicates, collects data, and maintains equipment. In the office, xerographic copies, phone systems, computers, and fax machines, even wall thermostats are electronically controlled. What's more, office decor has far more work stations incorporating wall panels and furniture with natural and synthetic fabric than ever before.

In manufacturing areas, more machines are electronically controlled. In fact, you see more control rooms (just to house electronic control systems) than in previous years.

All this means that the nature of today's business makes proper humidification a virtual necessity.

Why Improper Humidification Threatens Sensitive Electronic Equipment

Central to all electronic circuits today is the IC (integrated circuit) or "chip." The heart of the IC is a wafer-thin miniature circuit engraved in semiconductor material. Electronic components—and chips in particular—can be overstressed by electrical transients (voltage spikes). This may cause cratering and melting of minute areas of the semiconductor, leading to operational upsets, loss of memory, or permanent failure. The damage may be immediate or the component may fail sooner than an identical part not exposed to an electrical transient.

A major cause of voltage spikes is electrostatic discharge (ESD). Although of extremely short duration, transients can be lethal to the wafer-thin surfaces of semiconductors. ESD may deliver voltage as high as lightning and it strikes faster.

ESD is a particularly dangerous phenomenon because you are the source of these transients. It is the static electricity that builds up on your body. The jolt you get from touching a doorknob or shaking someone's hand is ESD. Table 9-1 below shows voltages which can be generated by everyday activities.

Voltage accumulates on surfaces (in this case, the human body), and when the surface approaches another at a lower voltage a discharge of electrical voltage occurs. Note the humidity levels at which these voltages may be generated. As the level of humidity rises, voltages are reduced because a film of moisture forms on surfaces, conducting the charges to the ground. Although the 65%-90% RH cited in Table 9-1 is impractical for office areas, any increase in humidity will yield a significant reduction in ESD events.

ESD Damage is Not Only Possible but Probable

A study of personnel ESD events in a poorly controlled room with a wool carpet was conducted for 16 months. The strength of the ESD event was measured in current (amps). Results indicate, for example, that a current discharge of 0.3 amps is 100 times more likely to occur at 10%-20% RH than at 45%-50% RH. In other words, the higher the relative humidity, the lower the occurrence and severity of ESD.

In addition to the risk of damage to electronic devices from static electricity charges, there are grave risks associated with sparks from static charges in many process applications. Static electricity is extremely dangerous in the presence of gases, volatile liquids, or explosive dusts such as is found in munitions plants, paint spray booths, printing plants, pharmaceutical plants, and other places.

While many static control products (special mats, carpeting, sprays, straps, etc.) are available, bear in mind that humidification is a passive static-control means. It is working to control static all the time—not just when someone remembers.

Table 9-1. Effect of Humidity on Electrostatic Voltages

Means of Static Generation	Electrostatic Voltages	
	10%-20% Relative Humidity	65%-90% Relative Humidity
Walking across carpet	35,000	1,500
Walking over vinyl floor	12,000	250
Worker at bench	6,000	100
Vinyl envelopes for work instructions	7,000	600
Common poly bag picked up from bench	20,000	1,200
Work chair padded with polyurethane foam	18,000	1,500

Figure 9-1.
Effect of humidity on electrostatic voltages.

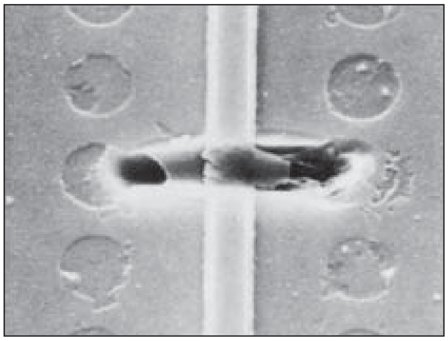

Integrated circuit damaged by ESD.
(Photo courtesy of Motorola Semiconductor, Inc.)

Paper and Paper Products

Every production superintendent in the paper industry is, by experience, familiar with the excessive scrap losses and customer complaints that can result from the following wintertime headaches:

1. Curling of stock.
2. Cracking or breaking at creases of folding boxes, cartons, corrugated and solid fiber containers.
3. Loss of package and container strength.
4. Production delays when sheets fail to go through machines smoothly due to static electricity.
5. Gluing failures.

All of the above wintertime problems have a common cause—dry or curling paper caused by low indoor relative humidities.

Whenever you heat air, without adding moisture, its RH drops. Table 10-1 shows that 0°F outside air at 75% RH will have a relative humidity of only 4.4% when heated to 70°F indoors. Even though the theoretical RH should be 4.4% in your plant, the actual observed humidity will be much higher because of the moisture given off by the paper. This type of humidification is very expensive in terms of stock and production.

Figure 10-1.
Effects of moisture content in folding paper. Sheet on left has proper moisture. Sheet on right lacks enough moisture—is dry and brittle—breaks on fold.

The RH of surrounding air governs the moisture content of paper, as shown in Table 11-1. The fibrils in paper take on moisture when the paper is drier than the surrounding air and give up moisture when the conditions are reversed.

A paper moisture content range of 5%-7% is essential to maintain satisfactory strength and workability of paper. This requires an indoor RH of about 40%-50%, depending upon the composition of the paper.

Moisture contents of different types of papers will vary slightly from those shown in the table but will follow an identical pattern.

Changes in moisture content thus cause paper to become thicker or thinner, flatter or curlier, harder or softer, larger or smaller, limp or brittle.

Table 10-1. How Indoor Heating Reduces Indoor RH and Dries Out Paper

Outdoor Temperature Degrees	Indoor Temperature 70°F	
	Indoor Relative Humidity %	Approx. Moisture Content of Paper
-20	1.5	0.5
-10	2.5	0.8
0	4.4	1.2
10	7.2	2.2
20	11.6	3.3
30	18.1	4.3
40	26.8	5.3
50	38.3	6.4
60	54.0	8.0
70	75.0	11.6

Effect of Indoor Heating Upon RH and Moisture Content of Kraft Wrapping Paper. NOTE: This table assumes an outdoor relative humidity of 75%. When outdoor RH is less, as is common, indoor RH will also be less. Indoor temperatures higher than 70° F will also cause lower relative humidities.

Printing

The dry air problems found in paper manufacturing are equally common to the printing industry.

Paper curling, generally caused by the expansion and contraction of an unprotected sheet of paper, takes place when too dry an atmosphere draws moisture from the exposed surface which shrinks and curls. The curl will be with the grain of the sheet. This trouble is most pronounced with very lightweight stocks or with cover stocks and coated-one-side papers.

Wood Products, Woodworking, and Furniture Manufacture

Like all hygroscopic materials, wood takes on or gives off moisture as the RH of the surrounding air varies. When, at any given temperature and relative humidity, the wood finally stops absorbing or liberating moisture, it is said to have reached its equilibrium moisture content (EMC). The moisture in the wood is then “in balance” with the moisture in the air.

It is generally not practical to hold indoor RH as high during the cold months as it is during the warm months. However, when the cold season sets in, humidifiers permit a gradual reduction of RH and EMC to a practical minimum working level. Under this controlled condition, warping and cracking will not occur.

Leather Processing

RH maintained uniformly in the 40%-60% range (higher in muller rooms) reduces cracking, minimizes loss of pliability, helps maintain quality and appearance, and reduces the dust problem in the plant.

Offices

RH maintained at 30%-40% stops splitting, checking, shrinkage, and glue joint failure in paneling and furnishings, adds life to carpeting and draperies. Electronic office equipment such as computers, xerographic copiers, and phone systems require a constant RH of 40%-50% to guard against harmful electrical transients (see Page 9).

Libraries and Museums

Relative humidity maintained uniformly at 40%-55% in storage rooms, vaults, and galleries prolongs the life of valuable collections by stabilizing the pliability of glue, starch and casein. The embrittlement of fibers in paper, canvas, papyrus, leather bindings, etc., is minimized.

Table 11-1. Moisture Content of Paper at Various Relative Humidities

Material	Description	Relative Humidity %								
		10	20	30	40	50	60	70	80	90
M.F. Newsprint	Wood Pulp 24% Ash	2.1	3.2	4.0	4.7	5.3	6.1	7.2	8.7	10.6
HMF Writing	Wood Pulp 3% Ash	3.0	4.2	5.2	6.2	7.2	8.3	9.9	11.9	14.2
White Bond	Rag 1% Ash	2.4	3.7	4.7	5.5	6.5	7.5	8.8	10.8	13.2
Com. Ledger	75% Rag 1% Ash	3.2	4.2	5.0	5.6	6.2	6.9	8.1	10.3	13.9
Kraft Wrapping	Coniferous	3.2	4.6	5.7	6.6	7.6	8.9	10.5	12.6	14.9

Armstrong® Determining Humidity Requirements of Materials

No single level of relative humidity provides adequate moisture content in all hygroscopic materials. Moisture content requirements vary greatly from one material to the next. We will discuss typical hygroscopic materials which require specific RH levels to avoid moisture loss and materials deterioration and/or production problems that result.

Table 12-1. Recommended Relative Humidities

Process or Product	Temp. °F	%RH
Residences	70-72	30
Libraries & Museums		
Archival	55-65	35
Art storage	60-72	50
Stuffed fur animals	40-50	50
Communication Centers		
Telephone terminals	72-78	40-50
Radio & TV studios	74-78	30-40
General Commercial & Public Buildings	70-74	20-30
(including cafeterias, restaurants, airport terminals, office buildings, & bowling centers)		
Hospitals & Health Facilities		
General clinical areas	72	30-60
Surgical area		
Operating rooms	68-76	50-60
Recovery rooms	75	50-60
Obstetrical		
Full-term nursery	75	30-60
Special care nursery	75-80	30-60
Industrial Hygroscopic Materials		
Abrasive		
Manufacture	79	50
Ceramics		
Refractory	110-150	50-90
Molding Room	80	60-70
Clay Storage	60-80	35-65
Decalcomania production	75-80	48
Decorating Room	75-80	48
Cereal		
Packaging	75-80	45-50
Distilling		
Storage		
Grain	6	35-40
Liquid Yeast	32-33	
General manufacturing	60-75	45-60
Aging	65-72	50-60
Electrical Products		
Electronics & X-ray:		
Coil & transformer winding	72	15
Semi conductor assembly	68	40-50
Electrical instruments:		
Manufacture & laboratory	70	50-55
Thermostat assembly & calibration	75	50-55
Humidistat assembly & calibration	75	50-55
Small mechanisms:		
Close tolerance assembly	72	40-45
Meter assembly & test	75	60-63
Switchgear:		
Fuse & cutout assembly	73	50
Capacitor winding	73	50
Paper Storage	73	50
Conductor wrapping with yarn	75	65-70
Lightning arrester assembly	68	20-40
Thermal circuit breakers assembly & test	75	30-60
High-voltage transformer repair	79	55
Water wheel generators:		
Thrust runner lapping	70	30-50
Rectifiers:		
Processing selenium & copper oxide plates	73	30-40
Fur		
Storage	40-50	55-65
Gum		
Manufacturing	77	33
Rolling	68	63
Stripping	72	53
Breaking	73	47
Wrapping	73	58
Leather		
Drying	68-125	75
Storage, winter room temp.	50-60	40-60
Lenses (Optical)		
Fusing	75	45
Grinding	80	80
Matches		
Manufacture	72-73	50
Drying	70-75	60
Storage	60-63	50
Mushrooms		
Spawn added	60-72	nearly sat.
Growing period	50-60	80
Storage	32-35	80-85
Paint Application		
Oils, paints: Paint spraying	60-90	80
Plastics		
Manufacturing areas:		
Thermosetting molding compounds	80	25-30
Cellophane wrapping	75-80	45-65
Plywood		
Hot pressing (resin)	90	60
Cold pressing	90	15-25
Rubber-Dipped Goods		
Cementing	80	25-30*
Dipping surgical articles	75-80	25-30*
Storage prior to manufacture	60-75	40-50*
Laboratory (ASTM Standard)	73.4	50*
*Dew point of air must be below evaporation temperature of solvent		
Tea		
Packaging	65	65
Tobacco		
Cigar & cigarette making	70-75	55-65
Softening	90	85-88
Stemming & stripping	75-85	70-75
Packing & shipping	73-75	65
Filler tobacco casing & conditioning	75	75
Filler tobacco storage & preparation	77	70
Wrapper tobacco storage & conditioning	75	75
Pharmaceuticals		
Powder storage (prior to mfg)*		*
Manufactured powder storage & packing areas	75	35
Milling room	75	35
Tablet compressing	75	35
Tablet coating room	75	35
Effervescent tablets and powders	75	20
Hypodermic tablets	75	30
Colloids	75	30-50
Cough drops	75	40
Glandular products	75	5-10
Ampoule manufacturing	75	35-50
Gelatin capsules	75	35
Capsule storage	75	35
Microanalysis	75	50
Biological manufacturing	75	35
Liver extracts	75	35
Serums	75	50
Animal rooms	75-80	50
Small animal rooms	75-78	50
*Store in sealed plastic containers in sealed drums.		
Photographic Processing		
Photo studio		
Dressing room	72-74	40-50
Studio (camera room)	72-74	40-50
Film darkroom	70-72	45-55
Print darkroom	70-72	45-55
Drying room	90-100	35-45
Finishing room	72-75	40-55
Storage room		
b/w film & paper	72-75	40-60
color film & paper	40-50	40-50
Motion picture studio	72	40-55
Static Electricity Control		
Textiles, paper, explosive control		>55
Clean Rooms & Spaces		45
Data Processing	72	45-50
Paper Processing		
Finishing area	70-75	40-45
Test laboratory	73	50

Abstracted from ASHRAE Systems and Applications Handbook.

How Psychometrics Help in Humidification

Psychometrics is the measurement of thermodynamic properties in moist air. As a problem-solving tool Psychometrics excel in clearly showing how changes in heating, cooling, humidification, and dehumidification can affect the properties of moist air. Psychrometric data is needed to solve various problems and processes relating to air distribution.

Most complex problems relating to heating, cooling and humidification are combinations of relatively simple problems. The psychrometric chart illustrates these processes in graphic form, clearly showing how changes affect the properties of moist air.

One of the reasons psychrometric data is particularly important today is traceable to the way most new buildings (and many older ones) are heated. The lower duct temperatures (55°F and below) used in new buildings make accurate humidity control more difficult to achieve. (This is because low duct temperatures have a limited ability to absorb moisture. Adding moisture via the central air handling system must compensate for reheating of air before it leaves the duct.)

For such applications, booster humidification must sometimes be accomplished in the duct of the zone after it has reached its final temperature (reheated).

To maintain typical conditions of 70°F and 50% RH, duct humidities will be very high (75% RH and above). To keep the duct from becoming saturated, a duct high limit humidistat is used, and becomes in these cases the main controller of the humidifier. Since this humidistat is in close proximity to the humidifier, and air is constantly moving, and must be controlled close to saturation, the humidifier output control must be fast, accurate and repeatable.

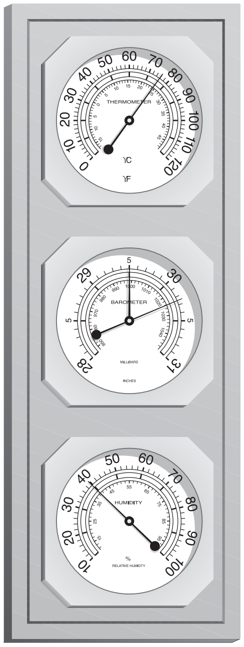

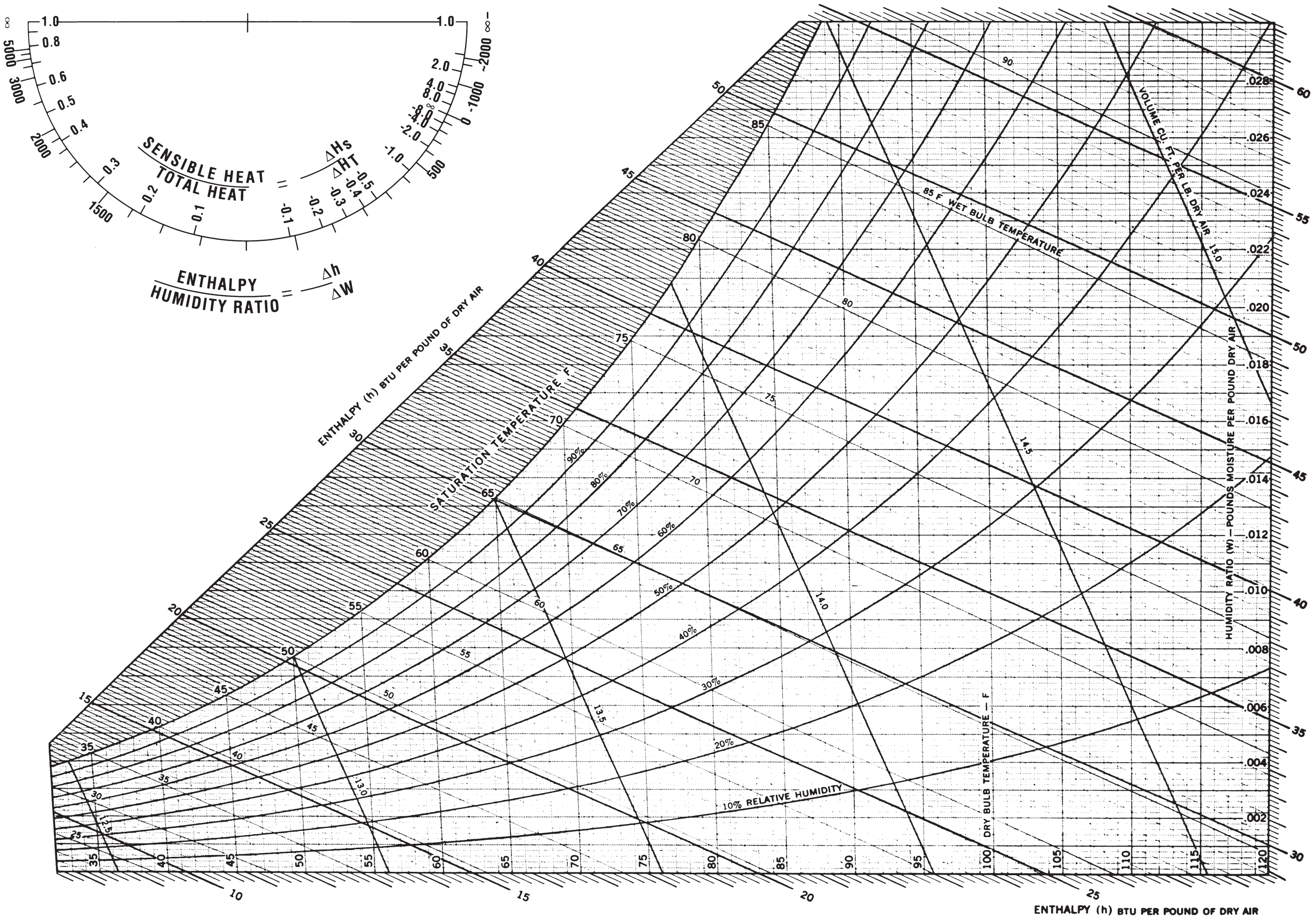

Armstrong®

Using the Psychrometric Chart

The psychrometric chart is a graphical representation of the thermodynamic properties which impact moist air.

It consists of eight major components:

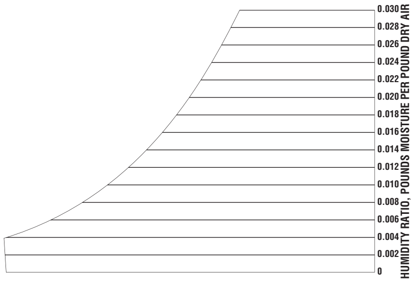

1. **Humidity ratio values** are plotted vertically along the right-hand margin, beginning with 0 at the bottom and extending to .03 at the top.

1. Humidity ratio values are plotted vertically along the right-hand margin, beginning with 0 at the bottom and extending to .03 at the top.

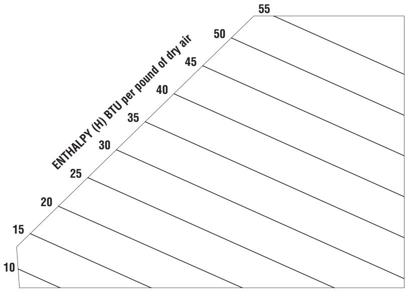

2. **Enthalpy**, or total heat, is plotted with oblique lines, at intervals of 5 Btu/lb of dry air, extending from upper left to lower right.

2. Enthalpy, or total heat, is plotted with oblique lines, at intervals of 5 Btu/lb of dry air, extending from upper left to lower right.

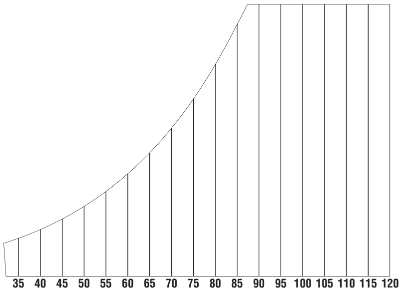

3. **Dry-bulb** temperature lines are plotted vertically at 1˚F intervals.

3. Dry-bulb temperature lines are plotted vertically at 1°F intervals.

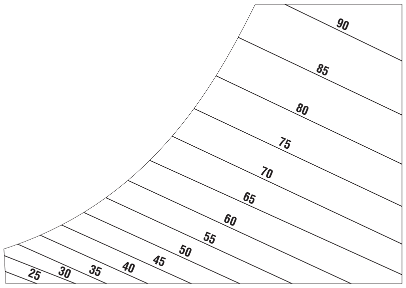

4. **Wet-bulb** temperature lines are indicated obliquely and fall almost parallel to enthalpy lines. They are shown at 1˚F intervals.

3. Wet-bulb temperature lines are indicated obliquely and fall almost parallel to enthalpy lines. They are shown at 1°F intervals.

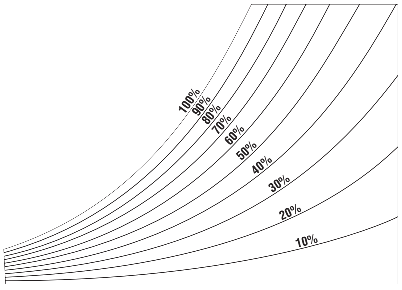

5. **Relative humidity** lines curve across the chart from left to right at intervals of 10%. They begin at the bottom at 10% and end at the top with the saturation curve (100%).

5. Relative humidity lines curve across the chart form left to right at intervals of 10%. They begin at the bottom at 10% and end at the top with the saturation curve (100%).

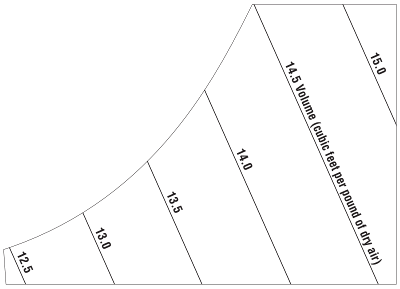

6. **Volume** lines indicating cubic feet per pound of dry air are plotted at intervals of .5 cubic feet.

6. Volume lines indicating cubic feet per pound of dry air are plotted at intervals of .5 cubic feet.

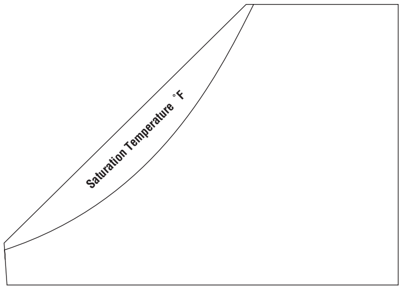

7. **Two-phase region** includes a narrow, cross-hatched area to the left of the saturation region indicating a mixture of condensed water in equilibrium.

7. Two-phase region includes a narrow, cross-hatched area to the left of the saturation region indicating a mixture of condensed water in equilibrium.

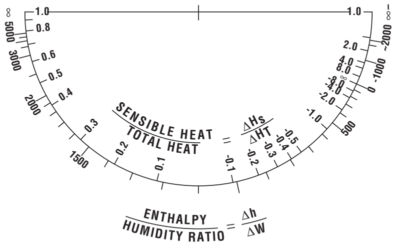

8. The protractor at the upper left of the chart contains two scales. One is for the ration of enthalpy difference. The other is for a ratio of sensible heat to the total heat. The protractor establishes the angle of a line on the chart along which a process will follow.

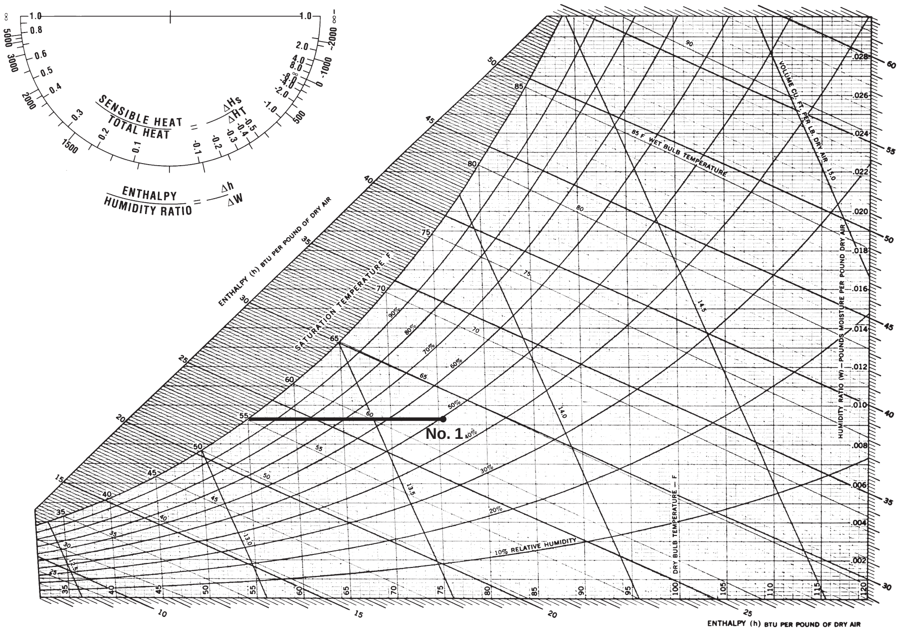

Example 1

Given the conditions of 75°F dry bulb and 50% RH, determine the dew point, volume and humidity content in grains per cubic foot of dry air.

Solution:

1. Locate the state point, where the 75°F dry-bulb line intersects the 50% RH line. Call this state point number 1.
2. Project horizontally to the left to the saturation curve and read 55°F (dew point).
3. Project horizontally to the right and read .0092 pounds of moisture per pound of dry air.
4. Draw a line through the state point parallel to 13.5 volume line and estimate a volume of 13.68 cubic feet per pound of dry air.
5. Solve for grains per cubic foot by converting:

$$\frac{0.0092 \times 7,000}{13.68} = 4.71 \text{ grains/cu ft}$$

See also Table 29-5, Page 29 for quick values.

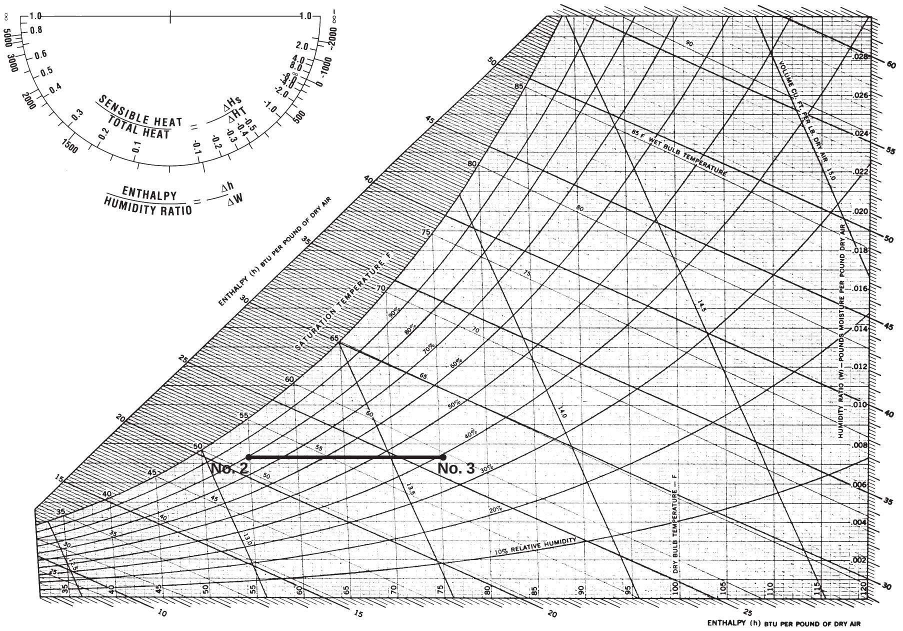

Example 2

Determine resultant RH when 55°F air at 80% RH is heated to a temperature of 75°F.

Solution:

1. Locate the state point where 55°F dry-bulb line intersects 80% RH line. Call this state point number 2.
2. Project horizontally to the right to intersect the 75°F dry-bulb line at 40% RH. Call this state point 3.
3. Observe that if air is delivered to a system at state point 2, that a reheat operation can deliver it to an area at state point 3.
4. If state point 1 (example 1) is desired in the area, then booster humidification is needed.

Steam Humidification (Isothermal)

Unlike other humidification methods, steam humidifiers have a minimal effect on dry-bulb (DB) temperatures. The steam humidifier discharges ready-made water vapor. This water vapor does not require any additional heat as it mixes with the air and increases relative humidity. Steam is pure water vapor existing at 212°F (100°C). This high temperature creates a perception that steam, when discharged into the air, will actually increase air temperature. This is a common misconception. In truth, as the humidifier discharges steam into the air, a steam/air mixture is established. In this mixture steam temperature will rapidly decrease to essentially the air temperature.

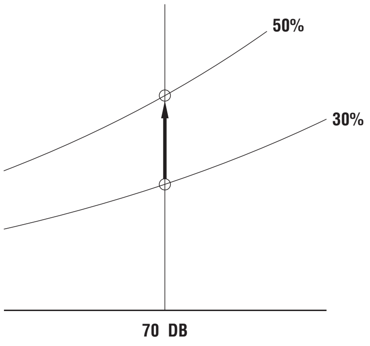

The psychrometric chart helps illustrate that steam humidification is a constant DB process. Starting from a point on any DB temperature line, steam humidification will cause movement straight up along the constant DB line. The example illustrates that 70°F DB is constant as we increase RH from 30%-50%. This is true because steam contains the necessary heat (enthalpy) to add moisture without increasing or decreasing DB temperature. Actual results utilizing high pressure steam or large RH increases (more than 50%) increase DB by 1° to 2°F. As a result, no additional heating or air conditioning load occurs.

Direct Steam Injection Humidifiers

The most common form of steam humidifier is the direct steam injection type. From a maintenance point of view, direct steam humidification systems require very little upkeep. The steam supply itself acts as a cleaning agent to keep system components free of mineral deposits that can clog many forms of water spray and evaporative pan systems.

Response to control and pinpoint control of output are two other advantages of the direct steam humidification method. Since steam is ready-made water vapor, it needs only to be mixed with air to satisfy the demands of the system. In addition, direct steam humidifiers can meter output by means of a modulating control valve. As the system responds to control, it can position the valve anywhere from closed to fully open. As a result, direct steam humidifiers can respond more quickly and precisely to fluctuating demand.

The high temperatures inherent in steam humidification make it virtually a sterile medium. Assuming boiler makeup water is of satisfactory quality and there is no condensation, dripping or spitting in the ducts, no bacteria or odors will be disseminated with steam humidification.

Corrosion is rarely a concern with a properly installed steam system. Scale and sediment—whether formed in the unit or entrained in the supply steam—are drained from the humidifier through the steam trap.

Steam-to-Steam Humidifiers

Steam-to-steam humidifiers use a heat exchanger and the heat of treated steam to create a secondary steam for humidification from untreated water. The secondary steam is typically at atmospheric pressure, placing increased importance on equipment location.

Maintenance of steam-to-steam humidifiers is dependent on water quality. Impurities such as calcium, magnesium and iron can deposit as scale, requiring frequent cleaning. Response to control is slower than with direct steam because of the time required to boil the water.

Direct Steam Humidification

Figure 16-1. Separator Type

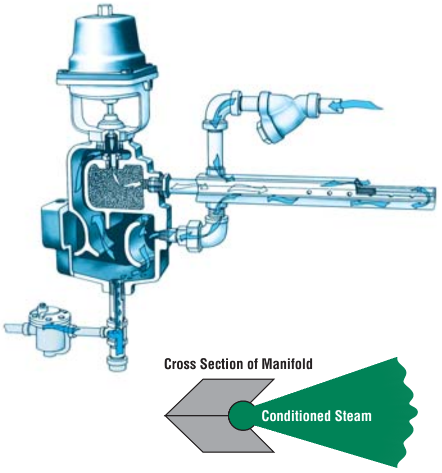

Figure 16-2. Panel Type

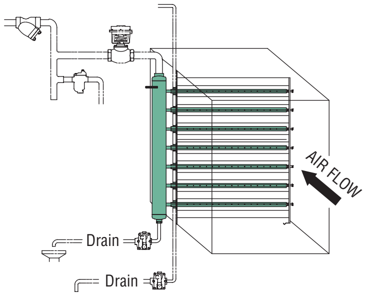

Steam-to-Steam Humidification

Figure 16-3.

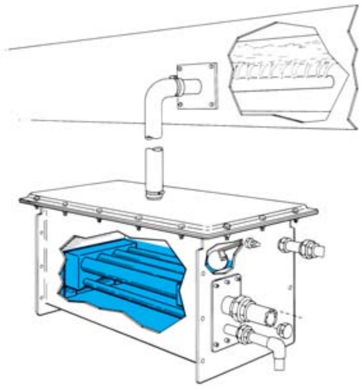

Electric Steam Humidifiers (Electrode)

Electric steam humidifiers are used when a source of steam is not available. Electricity and water create steam at atmospheric pressure. Electrode-type units pass electrical current through water to provide proportional output. Use with pure demineralized, deionized or distilled water alone will generally not provide sufficient conductivity for electrode units.

Water quality affects the operation and maintenance of electrode-type humidifiers. Use with hard water requires more frequent cleaning, and pure softened water can shorten electrode life. Microprocessor-based diagnostics assist with troubleshooting.

Electrode units are easily adaptable to different control signals and offer full modulated output. However, the need to boil the water means control will not compare with direct-injection units.

Electric Steam Humidifiers (Ionic Bed)

Ionic bed electric humidifiers typically use immersed resistance heating elements to boil water. Since current does not pass through water, conductivity is not a concern. Ionic bed technology makes the humidifier versatile enough to accommodate various water qualities. These units work by using ionic bed inserts containing fibrous media to attract solids from water as its temperature rises, minimizing the buildup of solids inside the humidifier. Water quality does not affect operation, and maintenance typically consists of simply replacing the inserts.

Ionic bed humidifiers are adaptable to different control signals and offer full modulated output. Control is affected by the need to boil the water.

Gas-Fired Steam Humidifiers (Ionic Bed)

In gas-fired steam humidifiers, natural gas or propane are combined with combustion air and supplied to a gas burner. The heat of combustion is transferred to water through a heat exchanger, creating atmospheric steam for humidification. Combustion gasses must be vented per applicable codes. Fuel gas composition, combustion air quality and proper venting can affect operation.

Water quality also can impact the operation and maintenance of gas-fired humidifiers. Ionic bed-type gas-fired humidifiers use ionic bed inserts containing fibrous media to attract solids from water as its temperature rises, minimizing the buildup of solids inside the humidifier. Therefore, water quality does not affect operation, and maintenance typically consists of simply replacing the ionic bed inserts.

Ionic bed gas-fired humidifiers are adaptable to various control signals and offer modulated output. However, control of room RH is affected by the need to boil water and limitations inherent in gas valve and blower technology.

Electric Steam Humidification with Ionic Beds

Figure 17-1.

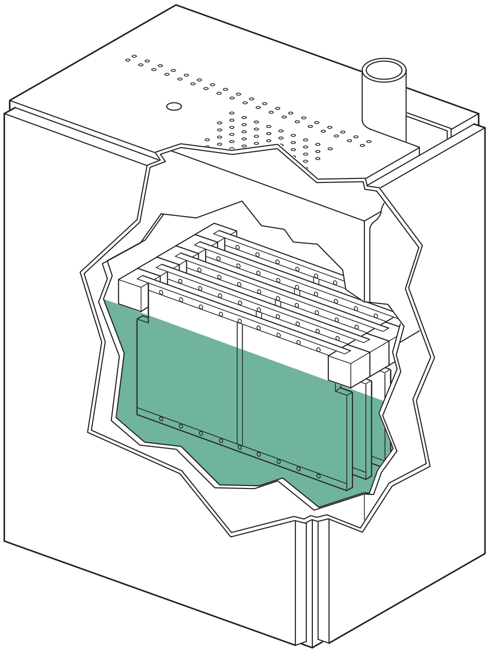

Gas-Fired with Ionic Beds

Figure 17-2.

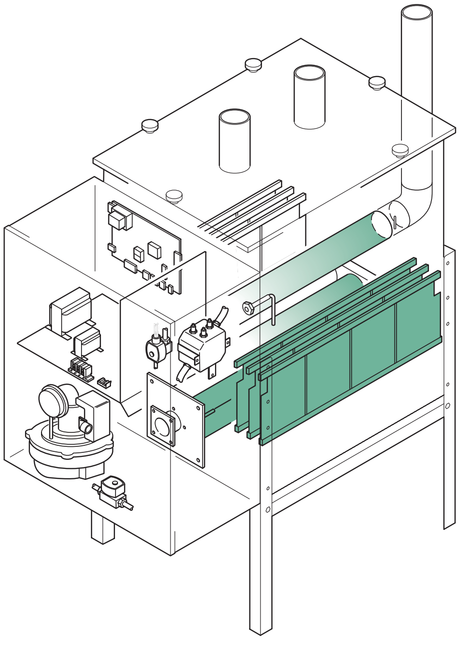

Fogging Systems (Adiabatic)

Fogging systems use compressed air to atomize water and create a stream of microscopic water particles, which appears as fog. In order to become vapor, water requires approximately 1,000 Btu per pound. The water particles quickly change from liquid to gas as they absorb heat from the surrounding air, or air stream. Properly designed fogging systems include sufficient heat in the air to allow the water to vaporize, avoiding “plating out” of water on surfaces, which might lead to control or sanitation problems.

Fogging systems contain virtually none of the heat of vaporization required to increase RH to desired conditions. For this reason, fogging systems humidification is a virtually constant enthalpy process. As the psychrometric example illustrates, DB temperature changes as RH increases from 30% to 50%. This evaporative cooling can provide energy benefits for systems with high internal heat loads.

Unlike many adiabatic humidifiers, properly designed fogging systems are able to modulate both compressed air and water pressures to provide modulated output. Although time and distance (in an air handling system) are required for evaporation, response to control is immediate. High evaporation efficiency guarantees maximum system performance.

A water analysis is suggested prior to applying fogging systems when reverse osmosis (RO) or deionized (DI) water is not available.

Cost Comparisons

To fairly evaluate the costs of selecting a humidification system, you should include installation, operating and maintenance costs as well as initial costs. Total humidification costs are typically far less than heating or cooling system costs.

Initial costs, of course, vary with the size of the units. Priced on a capacity basis, larger capacity units are the most economical, regardless of the type of humidifier, i.e.: one humidifier capable of delivering 1,000 pounds of humidification per hour costs less than two 500 lbs/hr units of the same type.

Direct steam humidifiers will provide the highest capacity per first cost dollar; fogging systems and gas-fired humidifiers are the least economical (first cost), assuming capacity needs of 100 lbs/hr or more.

Installation costs for the various types cannot be accurately formulated because the proximity of water, steam and electricity to humidifiers varies greatly among installations. Operating costs are low for direct steam and slightly higher for steam-to-

Figure 18-1.

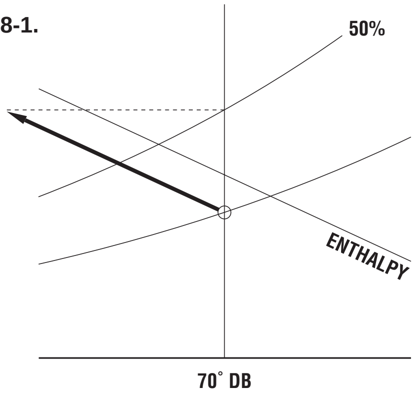

Figure 18-2. Fogger Head

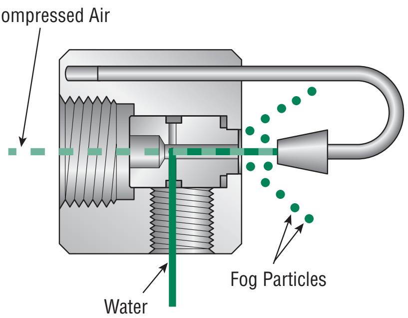

Table 18-1. Comparison of Humidification Methods

	Direct Steam	Steam-to-Steam	Electric Steam	Ionic Bed Electric Steam	Ionic Bed Gas-Fired Steam	Fogging Systems
Effect on temperature	Virtually no change					Substantial temperature drop
Unit capacity per unit size	Small to very large	Small	Small to medium	Small to medium	Small to medium	Small to very large
Vapor quality	Excellent	Good	Good	Good	Good	Average
Response to control	Immediate	Slow	Fair	Fair	Fair	Immediate
Control of output	Good to excellent	Below average	Average	Average	Below average	Good to excellent
Sanitation/corrosion	Sterile medium; corrosion free	Bacteria can be present	Programmed to not promote bacteria	Programmed to not promote bacteria	Programmed to not promote bacteria	Designed to not promote bacteria
Maintenance frequency	Annual	Monthly	Monthly to quarterly	Quarterly to semi-annually	Quarterly	Annual
Maintenance difficulty	Low	High	Medium	Low	Medium	Low
Costs: Price (per unit of capacity)	Low	High	Medium	Medium	High	Medium
Installation	Varies with availability of steam, water, gas, electricity, etc.					
Operating	Low	Low	Medium	Medium	Low	Low
Maintenance	Low	High	High	Low to medium	Low to medium	Low

steam. Fogging system and gas-fired (ionic bed) operating costs are also low. Energy costs are higher for electric humidifiers.

Direct steam humidifiers have the lowest maintenance costs, followed by fogging systems. Ionic bed electric and gas-fired humidifiers are designed specifically to minimize maintenance while adapting to various water qualities. Maintenance costs for other types can vary widely, depending on water quality and applications.

These are the principal considerations in selecting a humidification system. Table 18-1, Page 18 summarizes the capabilities of each humidifier type.

Recommended Applications

Steam: Recommended for virtually all commercial, institutional and industrial applications. Where steam is not available, small capacity needs up to 200 lbs/hr can be met best using ionic bed type, self-contained steam generating units. Above this capacity range, central system steam humidifiers are most effective and economical. Steam should be specified with caution where humidification is used in small, confined areas to add large amounts of moisture to hygroscopic materials. We recommend that you consult your Armstrong Representative regarding applications where these conditions exist.

Fogging Systems: Properly designed compressed air/water fogging systems used with a reverse osmosis (RO) or deionized (DI) water source will avoid problems associated with sanitation, growth of algae or bacteria, odor, or scale. The potential energy benefit associated with fogging systems should be examined for any application requiring over 500 lb/hr where steam is not available, or where evaporative cooling is beneficial, such as air side economizers or facilities with high internal heat loads.

Summary: The evidence supports the conclusion that steam is the best natural medium for humidification. It provides ready-made vapor produced in the most efficient evaporator possible, the boiler. There is no mineral dust deposited, and because there is no liquid moisture present, steam creates no sanitation problems, will not support the growth of algae or bacteria, has no odor and creates no corrosion or residual mineral scale.

With these advantages in mind, engineers specify steam boilers and generators solely for humidification when the building to be humidified does not have a steam supply. The minimum humidification load where this becomes economically feasible falls in the range of 200 lbs/hr. Steam generator capacity is generally specified 50% greater than maximum humidification load, depending on the amount of piping and number of humidifiers and distribution manifolds that must be heated. Typical piping for boiler-humidifier installations is shown in Figure 19-1.

Figure 19-1. Typical Piping for Boiler-Humidifier Installation

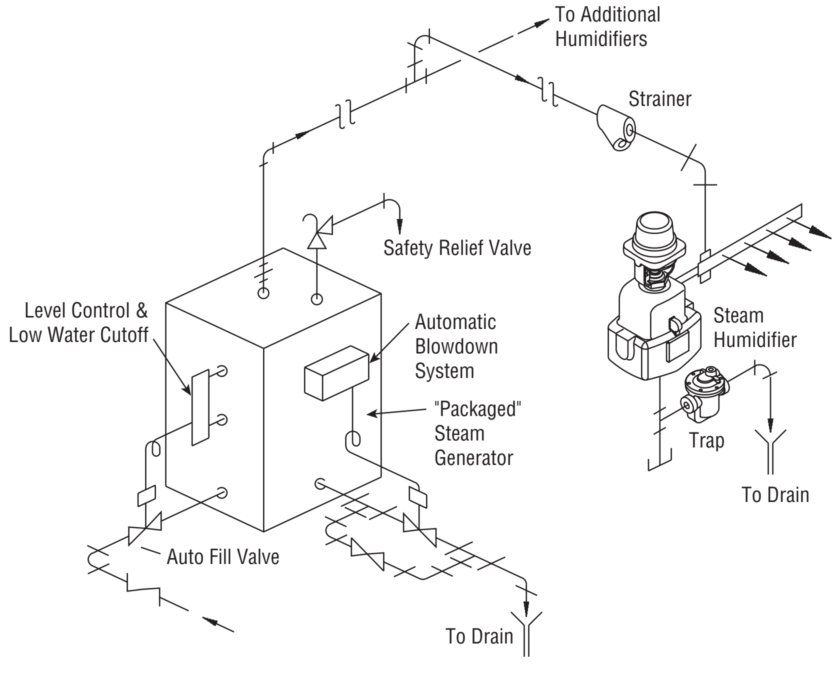

Design Guidelines— Boiler-Humidifier Combinations

1. Boiler gross output capacity should be at least 1.5 times the total humidification load.
2. Water softeners should be used on boiler feedwater.
3. Condensate return system is not necessary (unless required by circumstances).
4. Boiler pressure should be at 15 psig or less.
5. An automatic blowdown system is desirable.
6. All steam supply piping should be insulated.
7. No limit to size or number of humidifiers from one boiler.

Electric Or Gas-Fired Steam Humidifiers

When steam is not available, self-contained electric or gas-fired humidifiers can meet low-capacity requirements. The primary consideration in selecting this type of humidifier is its ability to work with wide ranges in water quality. Ionic bed electric or gas-fired humidifiers are frequently selected for this capability.

Direct Injection Steam Humidifiers

An evaluation of three performance characteristics is essential to understand the advantages steam holds over other humidification media:

- Conditioning
- Control
- Distribution

Figure 20-1. Steam Panel Humidifier

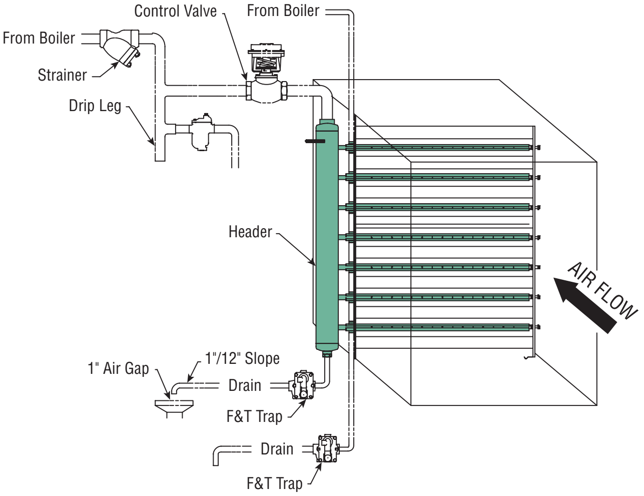

NOTE: Condensate cannot be lifted or discharged into pressurized return.

Figure 20-2. Cup Type Steam Humidifier

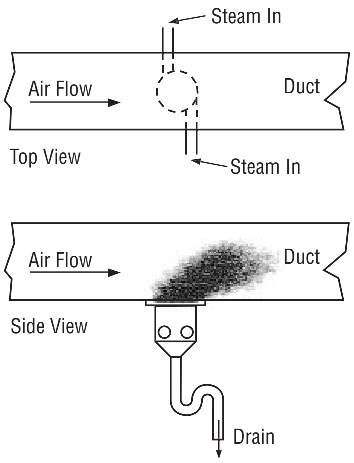

The humidifier must condition the steam so that it's completely dry and free of significant particulate matter. Response to control signals must be immediate, and modulation of output must be precise. Distribution of steam into the air must be as uniform as possible. Inadequate performance in any of these areas means the humidifier will not meet the basic humidification requirements.

Direct injection steam humidifiers are available in three basic types: specially designed steam panels, steam cups and the steam separator.

Specially designed steam panel systems incorporate advanced engineering in addressing unique applications where vapor trail is of prime concern.

Steam cup humidifiers receive steam from the side of the cup, which theoretically permits the condensate to fall by gravity to the steam trap. However, in practice a great deal of the liquid moisture in the steam goes into the air flow, and the steam itself is poorly distributed.

The steam separator is a more sophisticated device which, when properly designed, meets essential performance criteria.

Figure 20-3. Steam Separator Type Humidifier

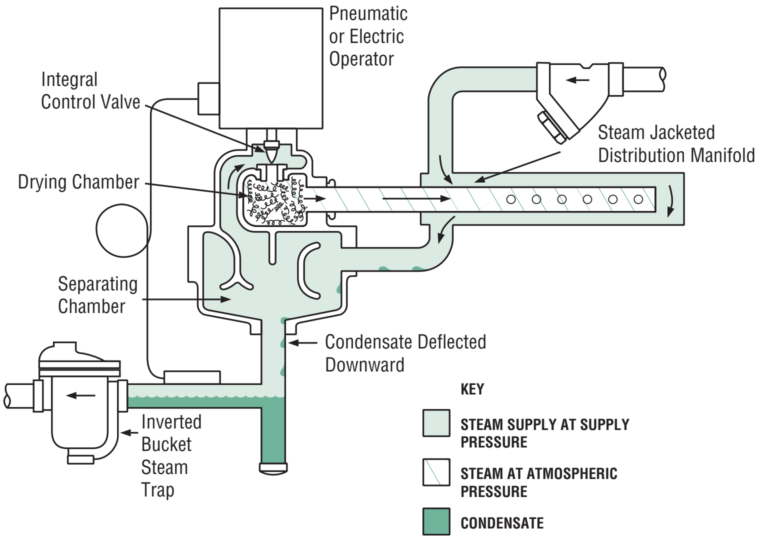

Steam Conditioning

As steam moves through supply lines, scale and sediment may be entrained in the flow—a Y-type strainer is required to remove larger solid particles. Similarly, the condensation that occurs in the supply lines permits water droplets or even slugs of condensate to be carried into the humidifier.

Several steps within the humidifier are required to positively prevent the discharge of liquid moisture and finer particulate matter along with the humidifying steam.

The separating chamber in the humidifier body should provide the volume required for optimum velocity reduction and maximum separation of steam from condensate. Properly separated, the condensate carries a substantial portion of the significant micronic particulates with it to be discharged through the drain trap.

Steam from the separating chamber can still carry liquid mist which must be removed. Humidifiers equipped with an inner drying chamber that is jacketed by the steam in the separating chamber can effectively re-evaporate any remaining water droplets before steam is discharged. Similarly, the control valve should be integral with the humidifier. Both the humidifier and the distribution pipe should be jacketed by steam at supply pressure and temperature to prevent condensation as steam is discharged.

Only proper design of the humidifier for conditioning of steam can assure the essential levels of sanitation and a clean atmosphere. These guidelines contribute to better comfort conditions and ensure that the humidifier meets the vital physical requirements of the system.

Chart 21-1. Desirable modified linear characteristic curve for valves used under modulating control. The modification of true linear characteristics provides more precise control when capacity requirements are very low and the valve is just cracked off the seat.

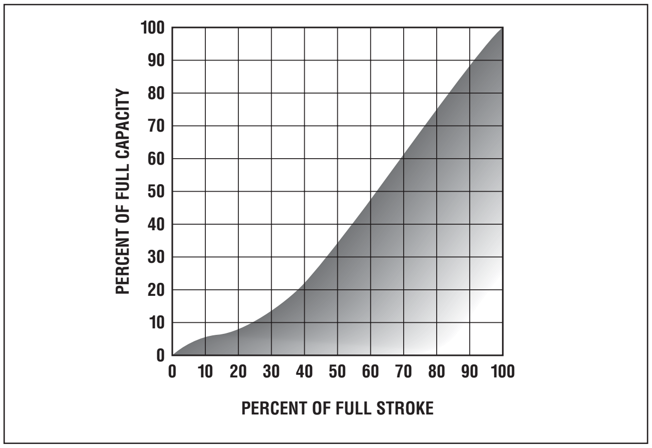

Control of Output

In most applications, humidifiers consistently operate at a fraction of maximum output.

Humidifier control must provide immediate response and precise modulation in order to accurately maintain the required relative humidity. Faulty control can make it difficult to provide the desired humidity level, and can lead to overloading the ducts with moisture and the creation of wet spots.

Two design factors affect the accuracy of humidifier control that can be achieved—the metering valve and the actuator that positions the valve.

Precise flow control can be achieved with a valve designed expressly for the purpose of adding steam to air. Parabolic plug type valves have been established as best for this service. They permit a longer stroke than comparable industrial valves, and the plug normally extends into the orifice even with the valve in “full open” position. This facilitates full and accurate modulation of flow over the complete stroke of the valve.

Figure 21-1. Parabolic Plug Metering Valve

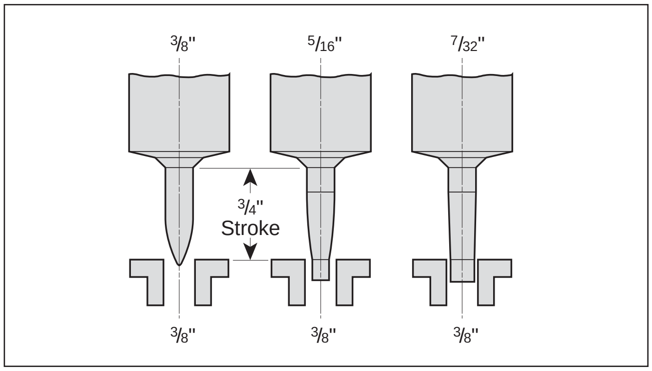

The Control Valve

The parabolic plug design also provides exceptionally high rangeability. Rangeability is the ratio between the maximum controllable flow and the minimum controllable flow of steam through the valve. The higher the rangeability of a valve, the more accurately it can control steam flow. Rangeabilities of the parabolic plug valves used in Armstrong Series 9000 Humidifiers shown in Table 22-1 are typical of the ratios that can be achieved with this type of valve.

The actuator is another important component in humidity control. Several types are available to provide compatibility with various system types. The actuator must be able to position the valve in very nearly identical relationship to the seat on both opening and closing strokes. This is essential to provide consistent, accurate metering of steam discharged by the humidifier.

By their design, electric motor modulating actuators provide true linear positioning characteristics on both opening and closing cycles. Pneumatic actuators may or may not be able to provide the precise positioning and holding characteristics essential to accurate control. Rolling diaphragm type pneumatic actuators are recommended, providing they meet the following criteria:

1. Large diaphragm area—12 sq in or more—to provide ample lifting force. This permits the use of a spring heavy enough to stabilize both the hysteresis effect and the flow velocity effect on the positioning of the valve stem versus air pressure to the actuator.
2. Diaphragm material highly resistant to wear or weakening from continuous cycling.
3. Actuator stroke long enough (in conjunction with valve plug and seat design) to provide high rangeability ratios.

All modulating actuators, whether electric or pneumatic, should incorporate a spring return. This is necessary to ensure closing the valve if there is an interruption of power or control air to the unit.

For industrial in-plant operation and for very limited duct applications, a solenoid actuator may be used to provide simple on-off operation. This type of actuator should not be specified for duct applications without a detailed analysis of the system.

Table 22-1. Steam Humidifier Valve Rangeabilities

Valve Size	Rangeability	
Equivalent Diameter	Ratio of Flow Max:Min	Minimum Flow as % of Maximum
1-1/2"	63:1	1.6
1-1/4"	69:1	1.4
1-1/8"	61:1	1.6
1"	53:1	1.9
7/8"	44:1	2.3
3/4"	33:1	3.0
5/8"	123:1	0.8
9/16"	105:1	0.9
1/2"	97:1	1.0
15/32"	85:1	1.2
7/16"	75:1	1.3
13/32"	64:1	1.6
3/8"	70:1	1.4
11/32"	59:1	1.7
5/16"	49:1	2.0
9/32"	40:1	2.5
1/4"	31:1	3.2
7/32"	24:1	4.2
3/16"	18:1	5.6
5/32"	59:1	1.7
1/8"	37:1	2.7
7/64"	28:1	3.5
3/32"	21:1	4.8
5/64"	15:1	6.9
1/16"	10:1	10.0

Chart 22-1. Desirable Operating Characteristic for Pneumatic Actuators
Position of valve is very nearly identical on both opening and closing strokes at any given air pressure to the actuator.

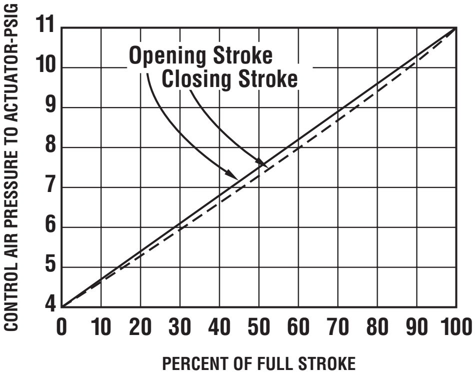

Distribution of Steam

The third essential factor in proper humidifier design is distribution. Steam must be discharged as uniformly as possible into the air to permit the fastest possible absorption without creating damp spots or saturated zones.

In normal ducts, a single distribution manifold installed across the long dimension will provide good distribution of steam. In large ducts or plenum chambers, it may be necessary to broaden the pattern of vapor discharge to achieve the required distribution, thus requiring multiple manifolds from single or multiple humidifiers.

Humidification for industrial areas without central air handling systems is customarily achieved with unit humidifiers discharging steam directly into the atmosphere. Proper mixing of steam and air can be accomplished in two ways. A dispersing fan may be mounted on the humidifier or a unit heater can be positioned to absorb and distribute the water vapor.

Figure 23-1. Unit Humidifier for Direct Discharge into Area Humidified

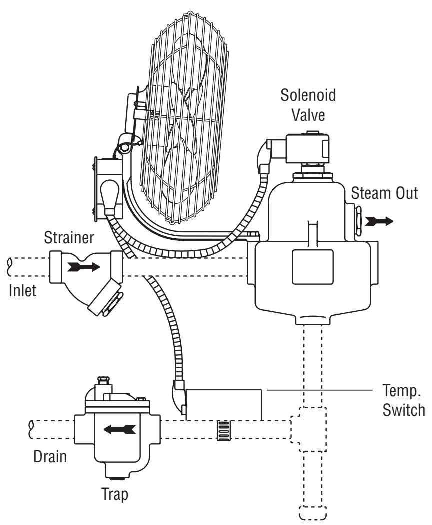

Figure 23-2. Single Distribution Manifold in a Normal Duct

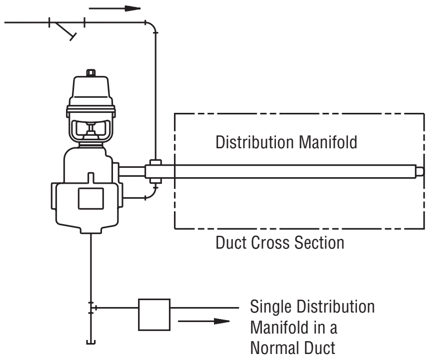

Figure 23-3. Multiple Distribution Manifolds in a Large Duct or Housing

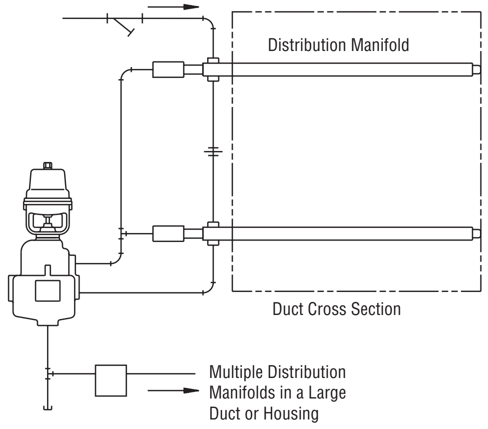

Note: See Page 26 for multiple manifold hook-ups.

Operating Noise

In addition to these crucial performance characteristics, operating noise is a consideration in selecting steam humidifiers for areas where quiet operation is essential or desirable, i.e., hospitals, office buildings, schools, etc.

Figure 23-4.
The noise of escaping steam is generated at the control valve. Muffling materials around the valve are necessary to minimize this noise.

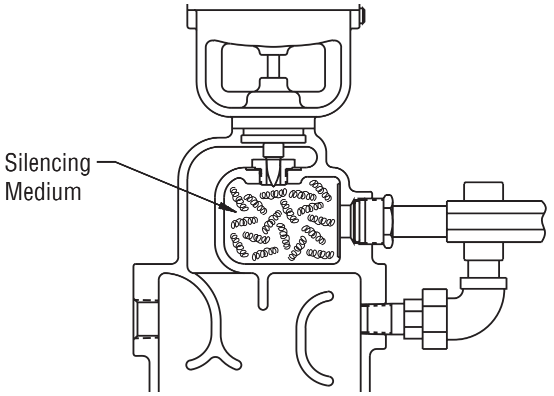

Basic Application Principles

Several basic principles must be considered in the application of steam humidification equipment to insure proper system operation.

Vapor dissipation in air ducts is one of these considerations. In the steam humidification process, pure water vapor at 212°F is mixed with air at a lower temperature. The mixing of hot steam with cooler air results in heat transfer. Any time heat is transferred from steam condensation takes place. This condensation is referred to as visible vapor. When steam is discharged from a manifold in an air duct, it quickly changes from an invisible gas into visible water particles, and then dissipates to become invisible again.

Visible vapor indicates an area of super-saturation, where the invisible steam gas is condensing into water particles. When condensation occurs, the steam gas releases its latent heat of vaporization (about 1,000 Btu/lb of vapor) to duct air. Then, as the vapor completely mixes with the duct air, the latent heat previously given off is reabsorbed, converting the visible vapor back into invisible gas with essentially no change in DB temperature. (See Figure 24-1).

Clearly, the vapor dissipation in air ducts is very important to proper location of temperature or humidity controllers. Any controller located in or near the visible vapor pattern will produce inaccurate results because of pockets of saturated air. Under typical duct conditions, all controllers should be located at least 10 to 12 feet downstream of a manifold. However, the following system characteristics will affect the visible vapor pattern, and therefore should be considered in controller location:

1. **Aspect Ratio of Duct.** The ratio of duct height to width is a factor that influences the visible vapor pattern. Figure 24-2 shows two ducts with equal cross section areas, but with different aspect ratios. Air velocities, temperatures, RH and vapor output from the manifolds are all identical. However, in the taller duct the manifold is shorter and its vapor output comes in contact with a much smaller percentage of duct air, causing a longer visible vapor pattern.

2. **Duct Air Temperature.** The temperature of the air flow in the duct also affects the length of the visible vapor pattern. Warmer air produces shorter vapor pattern, as shown in Figure 25-2, Page 25. All other conditions are the same.

Figure 24-1.
Typical dry-bulb (sensible) temperature variations within a duct near the humidifier manifold. As the latent heat of vaporization is released, the temperature increases (in or near the visible vapor the temperature may rise as much as 20° to 30° F). However, as the visible vapor mixes and re-evaporates in the air flow, the heat of vaporization is reabsorbed and the duct air temperature returns to its former level.

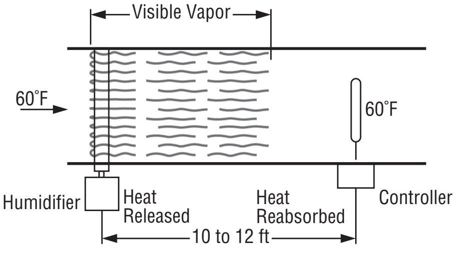

Figure 24-2.

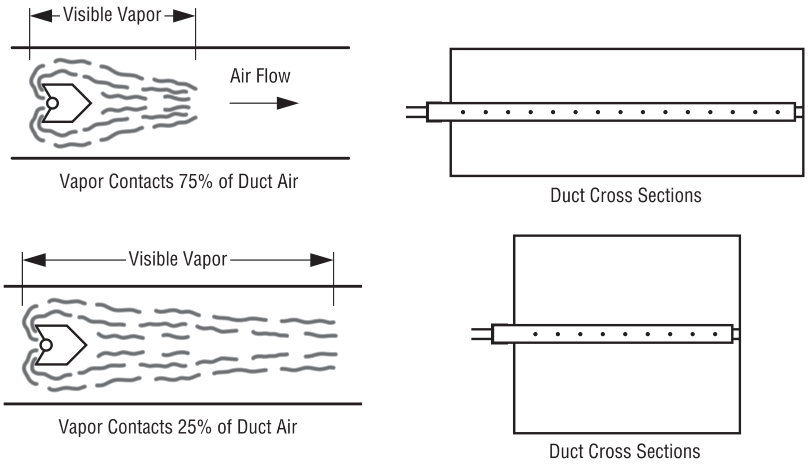

3. **Insulated Manifolds.** While it is true that steam humidification is an isothermal process, several Btu's of energy will be transferred into the air stream when using steam jacketed manifolds. Typically, this will result in less than a 3°F temperature gain. The use of insulated steam jacketed manifolds will reduce this heat transfer for air temperature critical applications.

   When insulated manifolds cannot be avoided, considerations need to be taken during the installation of these manifolds. A typical installation of a steam jacketed manifold requires the steam to be injected into the air stream. **When insulated manifolds are used, they need to be installed with the steam being injected with the air stream.** This is done to ensure moisture will not accumulate on the cool insulation jacket surfaces. However, when the manifolds are installed in this fashion, the added turbulence caused by the air flow travelling around the standard steam jacketed manifold is lost, resulting in a longer visible vapor trail. Figure 25-1 shows the proper installation, and effects on the visible vapor trail.

4. **Duct Air Velocity.** As the duct air velocity increases, the length of the visible vapor pattern increases. Figure 25-4 shows two sections of air ducts with air velocities of 500 fpm and 2,000 fpm respectively. Other conditions are the same: temperature, duct air humidity, duct dimensions and the amount of steam released from the identical manifolds. The length of the visible vapor pattern is approximately proportional to the velocity of the air in the duct.

5. **Number of Manifolds in Duct.** In a large duct section requiring the discharge capacity of two humidifiers, better vapor distribution is achieved by using two manifolds full across the duct and vertically spaced to divide the duct section into thirds. The same effect is achieved by using multiple distribution manifolds from a single humidifier that has adequate capacity to meet the requirements. When a quantity of vapor is distributed among multiple manifolds, the amount released through each manifold is smaller, and more of the duct air comes into contact with the vapor. This effect is shown in Figure 25-5.

6. **Duct Air RH.** Relative humidity in the duct also affects the visible vapor. The higher the relative humidity downstream of the humidifier discharge, the longer the visible vapor trail. The closer duct conditions are to saturation, the longer the vapor trails are likely to be. Fortunately, duct air RH may be controlled with a duct high-limit humidistat, as shown in Figure 27-2, Page 27.

Figure 25-1. Standard Jacketed Manifold

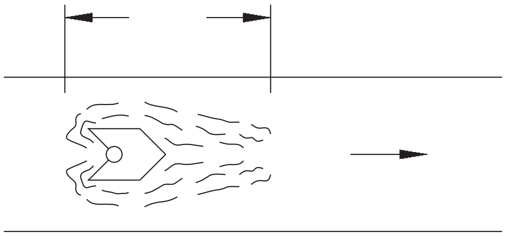

Figure 25-2. Insulated Jacketed Manifold

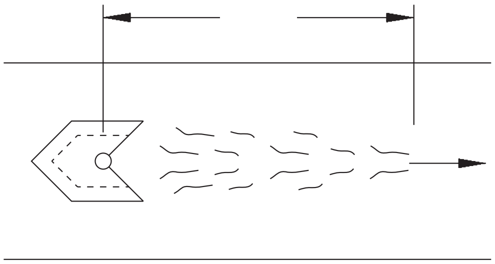

Figure 25-3.

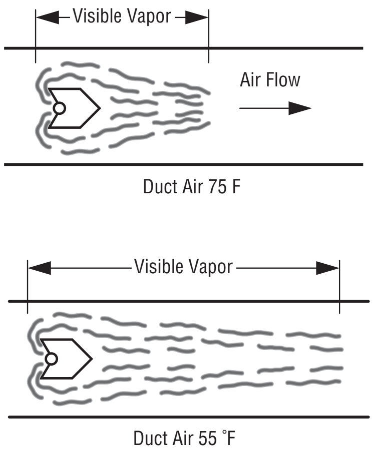

Figure 25-4.

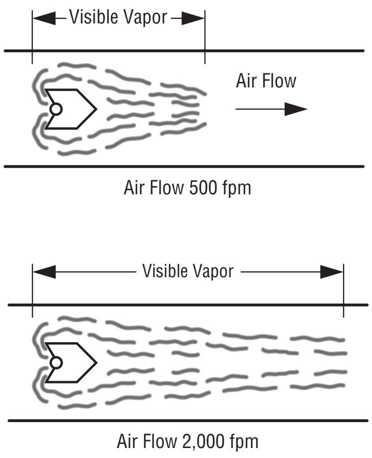

Figure 25-5.

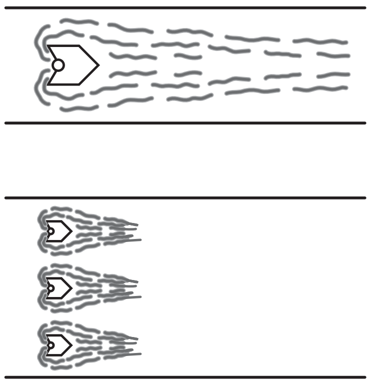

Basic Application Principles, continued...

Since the use of multiple manifolds reduces the length of visible vapor, their use should be considered whenever any of the following conditions exist at the humidifier location:

A. Duct air temperature is below 55°F or relative humidity is above 80%.
B. Duct air velocity exceeds 800 fpm.
C. "Final" or "high efficiency" filters are located within 10 feet downstream from humidifier.
D. Height of duct section exceeds 36."
E. Visible vapor impinges upon coils, fans, dampers, filters (not final), turning vanes, etc. located downstream from humidifier.

Table 26-1 and Figure 26-1 show a typical number of manifolds and typical spacing between them when duct height exceeds 36".

Consult your Armstrong Representative or download Armstrong Humid-A-ware Humidification Sizing and Selection software at www.armstrong-intl.com for specific recommendations regarding your needs.

The piping arrangement for humidifiers with multiple manifolds varies with the location of the manifolds.

When all manifolds are located above the humidifier inlet, manifold piping should be as shown in Figure 26-2.

When one or more manifolds are located below the humidifier inlet, the manifolds should be trapped separately, as shown in Figure 26-3.

Smaller manifolds, when possible to use, reduce the cost of multiple manifold installations. Care must be taken that the humidifier capacity does not exceed the combined capacity of the multiple manifolds. Piping arrangement is shown in Figure 27-3, Page 27.

7. **Humidifier Manifold too Close to High Efficiency Filter.** Many air handling systems require the use of high efficiency filters (also called "absolute" or "final" filters). These filters remove up to 99.97% of all particles 0.3 micron in diameter, and up to 100% of larger particles. The significance of these filtering qualities is shown in Table 26-2, where particle sizes of common substances are compared.

Table 26-1. Typical Number of Manifolds for Various Duct Heights

Duct height at humidifier location	No. of manifolds to be installed from one or more humidifiers
37" to 58"	2
59" to 80"	3
81" to 100"	4
101" & Over	5

Table 26-2. Typical Particle Sizes of Common Substances

Material	Particle Size in Microns
Particles visible to human eye	10 or more
Human hair	100
Dust	1 to 100
Pollen	20 to 50
Fog (visible steam vapor)	2 to 40
Mist (water spray)	40 to 500
Industrial fumes	0.1 to 1
Bacteria	0.3 to 10
Gas molecules (steam gas)	0.0006

Figure 26-1.

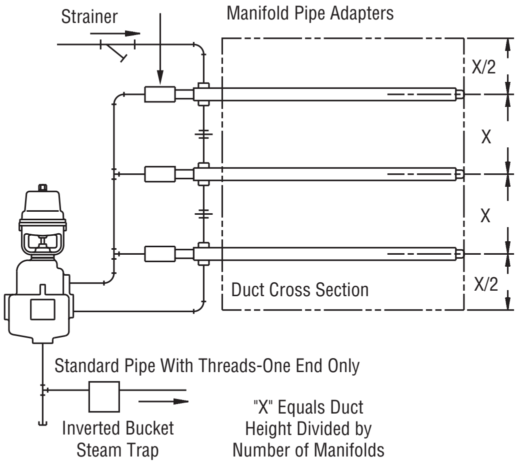

Figure 26-2.

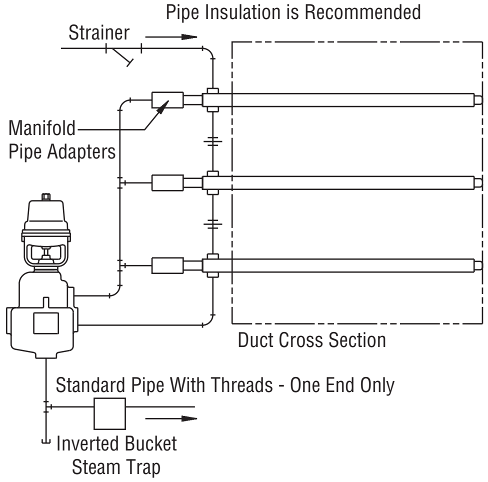

Figure 26-3.

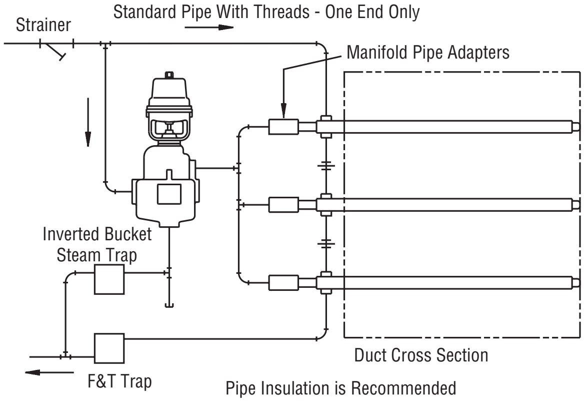

Since water particles present in visible vapor range from 2 to 40 microns, these particles are trapped by high efficiency filters. Some types of filters absorb moisture and expand, reducing air flow through the filter material. As a result, the static pressure in the duct rises from normal (about 1" water gauge) to as high as 40" wg. When the filter absorbs moisture, it also releases the latent heat of condensed steam into the duct air.

When a humidifier manifold is located too close to an absolute filter, the filter collects water vapor, preventing the moisture from reaching the space to be humidified. Placing the humidifier manifold farther upstream allows the water vapor to change into steam gas, which will pass unhindered through an absolute filter.

Under most circumstances, the water vapor will dissipate properly if the humidifier manifold is located at least 10 feet ahead of the final filter. However, if the duct air temperature is low, air velocity is high or the duct is tall, multiple manifolds may be installed to speed the mixing of steam with the duct air. For additional protection, install a duct high-limit controller just ahead of the final filter to limit the maximum humidity to approximately 90%. (See Figure 27-2)

Specially Designed Steam Panel Systems

For applications with particularly limited downstream absorption distances, custom engineered systems may be considered. The system includes a separator/header and multiple dispersion tube assembly packaged with a control valve, strainer, steam supply drip trap and one or two header drain traps. Each system is customized to provide uniform distribution and shortened non-wetting distance downstream. (See Figure 27-4.)

How Steam Panel Systems Shorten Non-wetting Distance

Conditioned steam enters each of the dispersion tubes and flows through steam nozzles that extend from the center of each tube, before discharging through orifices into the airstream.

Airflow first encounters baffle tubes (See Figure 27-1) which influence its flow pattern and increase its velocity. Air traveling around each set of baffle tubes encounters opposing flow of high velocity steam exiting the orifices. The result is more uniform distribution and faster absorption of moisture into the air, resulting in a shorter non-wetting distance requirement than experienced with traditional manifolds or dispersion tubes.

Figure 27-1.

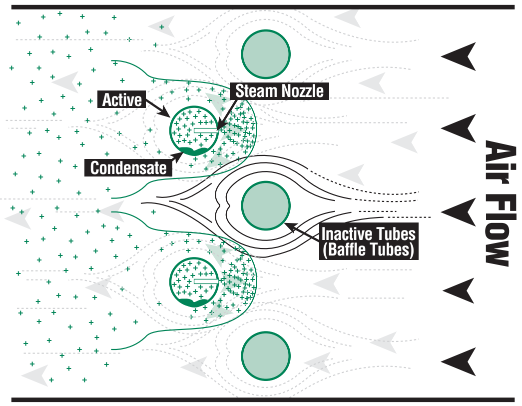

Figure 27-2.

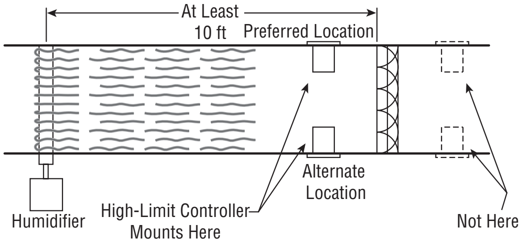

Figure 27-3.

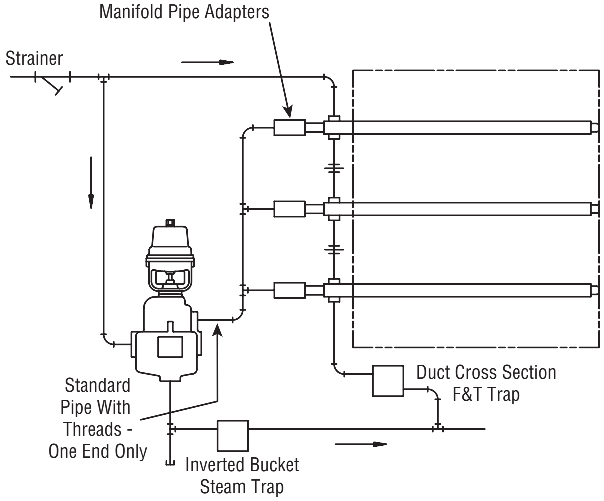

Figure 27-4. Steam Panel System

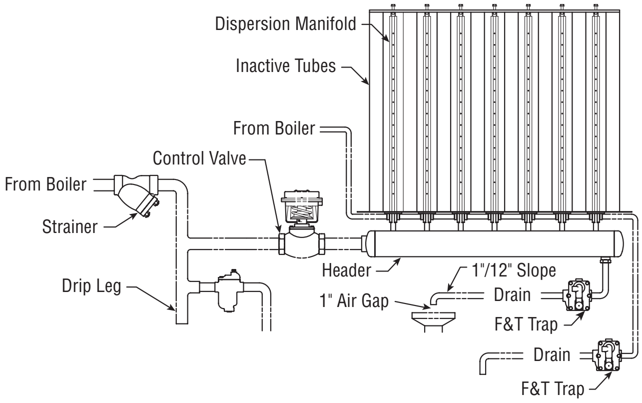

NOTE: Condensate cannot be lifted or discharged into pressurized return when using a steam panel system.

Psychrometric Considerations in Ducted Systems

In practice you may find that areas need humidification but cannot be satisfactorily humidified through the central air handling system. These are often areas having high sensible heat loads that must be balanced with low duct air temperatures to maintain design temperature conditions in the area. Typical examples are data processing rooms or hospital operating rooms where duct air temperatures may be held as low as 50°F to maintain a design condition of 75°F in the room. These low duct air temperatures prevent adding enough moisture to the air to meet design RH requirements in the room—say, 55% RH.

Using these conditions as an example, duct air at 50°F and 90% RH holds slightly less than 3.7 grains of moisture per cubic foot. At 75°F the same 3.7 grains of moisture yield a relative humidity of 39%. To achieve design conditions of 55% RH at 75°F, the air must contain 5.2 grains of moisture per cubic foot—1.5 grains more than it psychrometrically can hold at duct air temperature.

For such applications, booster humidification must be accomplished in the air of the area after it has reached its final temperature. Self-contained electric humidifiers may be used for this purpose, although we would recommend using combined steam humidifier-fan units which can be installed either within the humidified space or remote ducted to the space. For hospital applications, steam humidifier-fan units should include an integral high efficiency (95%) filter to satisfy code requirements.

Determining Humidification Loads for Air Handling Systems

Most engineers prefer to determine humidification requirements psychrometrically on the basis of design conditions and humidification requirements. However, short-cut methods for making these calculations or for checking psychrometric calculations are described below.

Sizing for Primary Humidification

In sizing duct humidifiers for air handling systems, you should know:
CFM of air.
Design outdoor air temperature and relative humidity.
Required indoor temperature and relative humidity.
Humidifier steam supply pressure.

The formula for load calculation is:

$$\begin{array}{c}\text{Humidification Load}\\ \text{in lbs/hr}\end{array} = \frac{\text{CFM (R2-R1) 60}}{7{,}000}$$

Where:
CFM = air flow of unhumidified air at moisture condition R1
R2 = moisture content of required indoor condition air in gr/ft3
R1 = moisture content of air to be humidified (from outdoor condition) in gr/ft3
7,000 = gr/lb conversion
60 = min/hr conversion

EXAMPLE, assume:
10,000 CFM of outdoor air.
Design outdoor air temperature 0°F.
Steam pressure 10 psig.
Required 40% RH at 70°F.
Air controls used.

From Table 29-1,Page 29, for 70°F final temperature, read 2.456 under 40% and opposite 0°F. This is pounds of vapor per hour for 100 CFM. Then 100 x 2.456 = 245.6 or, call it 246 lbs per hour required for design conditions.

A single humidifier can provide this capacity although sequence control for two humidifiers might be needed to avoid duct condensation on very light loads. Length of distribution manifold is governed by width of duct where the humidifier is to be located.

Sizing for Booster Humidifier

Assume that a primary humidifier provides air that will have 40% RH at 70°F, but you want to maintain 60% RH in a laboratory supplied with 900 CFM of the air at 40% at 70°F. Refer to Table 29-3, Page 29, and read 1.38 under 60% and opposite 70°F — 40%. 9 x 1.38 = 12.42 lbs. The humidifier must be able to provide this capacity at steam supply pressure.

Special Conditions

When relative humidities must be figured for temperature conditions other than those given in Tables 29-1 through 29-3, Table 29-5, Page 29, will prove helpful.

New Condition—55% RH at 77°F.
Makeup Air—35% RH at 70°F.
From Table 29-5, Page 29:
Grains per cu ft
New Condition..5.54
Less Grains per cu ft,
Makeup Air 2.82
Grains to be added 2.72
Assume 800 CFM

$$\frac{800 \text{ x } 2.72 \text{ x } 60}{7{,}000} = 18.65 \text{ lbs/hr}$$

NOTE: .857 lb of steam per hour will add 1 grain to 100 CFM. Use of this factor simplifies the above equation to:

8 x 2.72 x .857 = 18.65.

Where Table 29-5, page 29, is used for outdoor air makeup, assume 75% RH for the outdoor air at 0° to -20°F.

Room to Duct Comparisons

When high humidity is needed in a room (70°F-60% RH) and the duct temperature is lower than the room temperature (50°F), the duct high-limit humidistat often acts as the controlling stat. Duct high-limit humidistats should be set between 70% and 90% RH. We do not recommend setting the high-limit stat any higher than 90% RH. Table 29-4, Page 29, shows the maximum room humidity that can be achieved for the given duct conditions.

Humid-A-ware™ Can Simplify Humidifier Selection

Armstrong offers a free software program that can eliminate the need for time-consuming pencil-and-paper calculations. The Armstrong Humidi-A-ware™ Humidification Sizing and Selection Software runs on Microsoft® Windows® 9x and Windows® 200x. Once the user-friendly software is loaded into your computer, the program displays on your monitor a series of easy-to-understand questions about your humidification application. You respond to the questions—often with a single keystroke—and Humid-A-ware™ can:

- Calculate humidification load.
- Determine correct humidifier model number.
- Create and customize equipment and data schedule.
- Indicate psychrometric properties of air.
- Calculate non-wetting distance.
- Print the complete humidification application specification.

You may request a free copy of the Humid-A-ware™ Humidification Sizing and Selection software with catalog and drawings available as PDF files by contacting your local Armstrong Representative. Or visit www.**armstrong**international.com for complete humidification information.

Table 29-1. 70°F Primary Humidification Pounds of vapor required per hour per 100 CFM to secure desired RH at 70°F (outside air 75% saturated)

Outdoor	Relative Humidity Desired							
Temp.	35%	40%	45%	50%	55%	60%	65%	70%
*30	1.165	1.510	1.855	2.200	2.545	2.891	3.236	3.581
20	1.618	1.963	2.308	2.653	2.998	3.344	3.689	4.034
10	1.918	2.263	2.608	2.953	3.298	3.644	3.989	4.334
0	2.111	2.456	2.801	3.146	3.591	3.837	4.182	4.527
-10	2.233	2.578	2.923	3.268	3.613	3.959	4.304	4.649
-20	2.309	2.654	2.999	3.344	3.689	4.035	4.380	4.725

Table 29-2. 75°F Primary Humidification Pounds of vapor required per hour per 100 CFM to secure desired RH at 75°F (outside air 75% saturated)

Outdoor	Relative Humidity Desired							
Temp.	35%	40%	45%	50%	55%	60%	65%	70%
*30	1.584	1.989	2.394	2.799	3.204	3.609	4.014	4.419
20	2.034	2.439	2.844	3.249	3.654	4.059	4.464	4.869
10	2.334	2.739	3.144	3.549	3.954	4.359	4.764	5.169
0	2.529	2.934	3.339	3.744	4.149	4.554	4.959	5.364
-10	2.652	3.057	3.462	3.867	4.272	4.677	5.082	5.487
-20	2.727	3.132	3.537	3.942	4.347	4.752	5.157	5.562

*When outdoor design temperatures exceed 30°F, use Table 30-5, entering the table with both outdoor design temperature and outdoor design RH.

Table 29-3. Booster Humidification Pounds of vapor required per hour per 100 CFM to secure desired relative humidity with no change in air temperature

Initial Condition		Relative Humidity Desired						
Temp.	RH	40%	45%	50%	55%	60%	65%	70%
70	35%	.345	.690	1.03	1.38	1.72	2.07	2.42
70	40%	—	.345	.69	1.03	1.38	1.72	2.07
72	35%	.368	.728	1.10	1.46	1.83	2.20	2.57
72	40%	—	.368	.73	1.10	1.46	1.83	2.20
75	35%	.405	.810	1.22	1.62	2.03	2.43	2.84
75	40%	—	.405	.81	1.22	1.62	2.03	2.43

Table 29-4. Maximum Room RH for Given Duct Conditions

Duct Temperature °F	Duct Relative Humidity (RH)	Room RH @ Temperature °F			
		68°	70°	72°	75°
50	90%	47%	44%	41%	37%
	85%	44%	41%	39%	35%
	80%	42%	39%	36%	33%
55	90%	57%	53%	49%	44%
	85%	53%	50%	46%	42%
	80%	50%	47%	44%	39%
60	90%	68%	63%	59%	53%
	85%	64%	60%	56%	50%
	80%	60%	56%	52%	47%

Table 29-5. Grains of Water Vapor per cu ft of Air at Various Temperatures and Relative Humidities

Air Temp.	Grains cu ft Saturated	Grains per cu ft at Relative Humidity Specified							
		35%	40%	45%	50%	55%	60%	65%	75%
80	11.04	3.86	4.42	4.97	5.52	6.07	6.62	7.18	8.28
79	10.71	3.75	4.28	4.82	5.36	5.89	6.43	6.96	8.03
78	**10.38**	**3.63**	**4.15**	**4.67**	**5.19**	**5.71**	**6.23**	**6.75**	**7.79**
77	10.06	3.52	4.03	4.53	5.03	5.54	6.04	6.55	7.55
76	9.749	3.41	3.90	4.39	4.87	5.36	5.85	6.34	7.31
75	**9.448**	**3.31**	**3.78**	**4.25**	**4.72**	**5.20**	**5.67**	**6.14**	**7.09**
74	9.153	3.20	3.66	4.12	4.58	5.03	5.49	5.95	6.86
73	8.867	3.10	3.55	3.99	4.43	4.88	5.32	5.76	6.65
72	**8.568**	**3.01**	**3.44**	**3.86**	**4.29**	**4.72**	**5.15**	**5.58**	**6.44**
71	8.319	2.91	3.33	3.74	4.16	4.58	4.99	5.41	6.24
70	8.055	2.82	3.22	3.62	4.03	4.43	4.83	5.24	6.04
65	**6.845**	**2.40**	**2.74**	**3.08**	**3.42**	**3.76**	**4.11**	**4.45**	**5.13**
60	5.795	2.03	2.32	2.61	2.90	3.19	3.48	3.77	4.35
55	4.889	1.71	1.96	2.20	2.44	2.69	2.93	3.18	3.67
50	**4.106**	**1.44**	**1.64**	**1.85**	**2.05**	**2.26**	**2.46**	**2.67**	**3.08**
40	2.863	1.00	1.15	1.29	1.43	1.57	1.72	1.86	2.15
30	1.946	.58	.68	.78	.97	1.07	1.17	1.26	1.46
20	**1.242**	**.43**	**.50**	**.56**	**.62**	**.68**	**.75**	**.81**	**.93**
10	.776	.27	.31	.35	.39	.43	.47	.50	.58
0	.475	.17	.19	.21	.24	.26	.29	.31	.36
-10	**.285**	**.10**	**.11**	**.13**	**.14**	**.16**	**.17**	**.19**	**.21**
-20	.166	.06	.07	.07	.08	.09	.10	.11	.12

Steam required to add 1 gr per cu ft to 100 CFM:
100 x 60 = 6,000 cu ft per hour or 6,000 grains per hour. $\frac{6,000}{7,000}$ = .857 lb/hr

Economizer Cycles

Fan coil air systems which mix return air and outside air in varying amounts to obtain a given final mixed air temperature require special consideration in determining maximum humidification loads.

Systems of this type usually use a fixed minimum amount of outside air (approximately 10%-30%) when outside air temperature is at a maximum design (-10°F). As the outside air temperature increases, more outside air is mixed with return air to achieve a final mixed air temperature (55°F). Since humidification load is a function of the amount of outside air introduced (plus its moisture content) the maximum humidification requirement will occur at some outside air temperature other than maximum design.

Conditions

Tables 30-1 and 30-3 below give the percent of outside air required to maintain desired mixed air temperature when outside air temperature is as shown. Table 30-1 is used when return air (room air) temperature is at 70°F. Table 30-3 is for 75°F return air systems.

Tables 30-2 and 30-4 can be used to determine maximum humidification load at the given conditions of mixed air temperature and required RH, assuming 40% RH OSA and 10% minimum OSA.

NOTE: Consideration must be given to over-saturating conditions in lower temperature systems.

EXAMPLE

Given conditions that 70°F return air temperature is mixed with outside air to produce 55°F constant mixed air temperature in duct. The design of the space being conditioned is 70°F at 40% RH. Total volume of air through the fan system is 40,000 CFM. Determine maximum humidification load.

From Table 30-2 with 55°F mixed air temperature and 40% RH space design, the maximum humidification load is 11.4 pounds per 1,000 CFM of total air volume. This maximum load occurs when the outside air temperature is at 55°F. Multiplying 11.4 x 40 results in total pounds per hour required in the 40,000 CFM system. Therefore maximum humidification load becomes 456 pounds of vapor per hour.

Table 30-1. With 70°F Return Air

Desired Mixed Air Temp. °F	% Outside Air Required at Temperature Shown														
	-10°	0°	5°	10°	15°	20°	25°	30°	35°	40°	45°	50°	55°	60°	65°
50	25	29	31	33	36	40	45	50	57	67	80	100	—	—	—
55	19	21	23	25	27	30	33	36	43	50	60	75	100	—	—
60	12	14	15	17	18	20	22	25	29	33	40	50	67	100	—
65	6	7	7	8	9	10	11	13	14	16	20	25	33	50	100

Table 30-2. With 70°F Return Air

Max. Humidification Load (given in lbs. of vapor/hr/1,000 CFM of total air) Occurs at Outside Air Temp. Shown for Given Inside RH												
Inside RH	30%		35%		40%		45%		50%		55%	
Mixed Air Temp. °F	Outside Air °F	Max. Load	Outside Air °F	Max. Load	Outside Air °F	Max. Load	Outside Air °F	Max. Load	Outside Air °F	Max. Load	Outside Air °F	Max. Load
50	42	7.7	50	10.7	50	14.2	50	17.7*	50	21.2*	50	24.7*
55	42	5.8	52	8.0	55	11.4	55	14.9	55	18.4	55	22.0*
60	42	3.8	52	5.4	60	8.2	60	11.7	60	15.2	60	18.7
65	0	1.9	52	2.7	65	4.4	65	7.9	65	11.4	65	15.0

Table 30-3. With 75°F Return Air

Desired Mixed Air Temp. °F	% Outside Air Required at Temperature Shown														
	-10°	0°	5°	10°	15°	20°	25°	30°	35°	40°	45°	50°	55°	60°	65°
50	30	33	36	38	42	45	50	56	62	71	83	100	—	—	—
55	23	26	28	31	33	36	40	44	50	57	67	80	100	—	—
60	18	20	21	23	25	27	30	33	37	43	50	60	75	100	—
65	12	13	14	15	16	18	20	22	25	29	33	40	50	67	100

Table 30-4. With 75°F Return Air

Max. Humidification Load (given in lbs. of vapor/hr/1,000 CFM of total air) Occurs at Outside Air Temp. Shown for Given Inside RH												
Inside RH	30%		35%		40%		45%		50%		55%	
Mixed Air Temp. °F	Outside Air °F	Max. Load	Outside Air °F	Max. Load	Outside Air °F	Max. Load	Outside Air °F	Max. Load	Outside Air °F	Max. Load	Outside Air °F	Max. Load
50	46	11.2	50	15.2	50	19.3*	50	23.5*	50	27.7*	50	31.9*
55	46	8.9	55	12.4	55	16.6	55	20.8*	55	24.9*	55	29.1*
60	46	6.7	60	9.3	60	13.4	60	17.5	60	21.7	60	25.9*
65	46	4.5	65	6.2	65	9.6	65	13.7	65	17.9	65	22.1*

*Humidification loads will exceed 90% RH in duct at temperature indicated. Booster humidification is recommended.

Steam Humidifiers in Central Systems

Proper location, installation and control of humidifiers is essential to achieve totally satisfactory, trouble-free performance. The primary objective is to provide the required relative humidity without dripping, spitting or condensation. Liquid moisture, even in the form of damp spots, cannot be tolerated in the system. Aside from the hazards to the structure caused by water in the ducts, there is an even more critical health hazard if breeding grounds are provided for bacteria.

In addition to the need for proper humidifier design and performance, several other factors deserve close attention. The humidifier must be the proper capacity for the system; properly located in relation to other components of the system; properly installed and piped in a manner that will not nullify all the other precautions taken. In sizing humidifiers you should be sure that they deliver the amount of steam per hour called for in the design calculations. Steam pressure to the humidifiers must be kept relatively constant to assure sufficient capacity. Double-check to be sure you're not trying to put more moisture into the air stream than it can hold at its existing temperature. Use of Psychometrics can be a helpful aid in determining moisture potential in your application.

Proper location of humidifiers in the system is most important, although sometimes the design of the system makes this difficult to achieve. The following examples of typical systems demonstrate proper humidifier location.

System 1

This is a simple ventilating system. We assume final duct air temperature to be slightly above desired room temperature. The desirable location of the steam jacketed distribution manifold of the primary humidifier is downstream from the supply fan. This humidifier would be sized for maximum design load. If the humidifier were located between the coil and the fan, it might interfere with the temperature sensing bulb. The indicated use of a high-limit duct humidity controller shown is optional. It is advisable if the capacity of the humidifier at design loads could possibly overload air when outside air moisture content is higher than the design. The high-limit controller should be 10 to 12 feet downstream from the humidifier. Place the high-limit controller where it will see the same temperature as the humidifier. A cooler temperature at the humidifier would allow saturation if the high-limit controller were in warmer air.

This is shown as a pneumatic control system. The fan switch activates the control system and the electric pneumatic relay bleeds air from the humidifier actuator diaphragm when the fan is off. The following examples also show pneumatic control—if the systems were electric, control locations would remain the same.

System 1

Figure 31-1.
Ventilation system with primary humidification

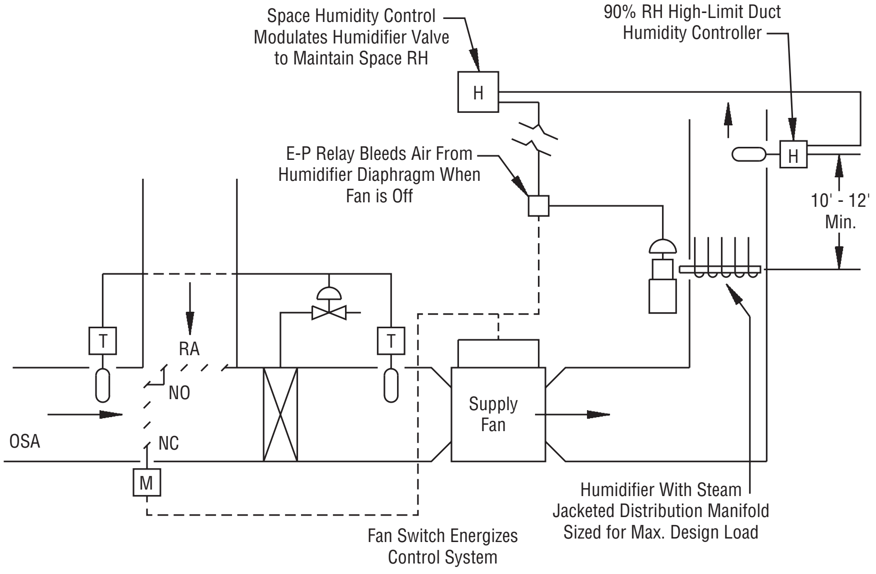

Features of this system and the following systems include:

A. Accurate control is possible because of immediate response of steam humidifier.
B. Control can be modulating electric or pneumatic (shown).
C. No need for drain pans or eliminator plates; makes locations of humidifier more flexible.
D. Addition of moisture is accomplished with no appreciable change in duct dry-bulb temperature.
E. The humidifier's integral steam jacketed control valve with parabolic plug is accurately sized to meet capacity requirements.

Glossary of Symbols

EA	Exhaust Air
E-P relay	Electric-Pneumatic relay
H	Humidity controller
M	Damper motor
MA	Mixed air
NC	Normally closed
NO	Normally open
OSA	Outside Air
RA	Return Air
T	Temperature Controller

System 2

This is a typical 100% outside air system with preheat and reheat coils. The preheat coil heats outside air to a duct temperature controlled at 50° to 60°F. The reheat coil adds more sensible heat depending on the space heat requirement. Here the desirable location for the primary humidifier is downstream from the reheat coil to introduce moisture into the highest level of dry-bulb air temperature.

Note the humidity controller location in the exhaust air duct. When a good pilot location for a humidity controller is not available in the space humidified, one placed in the exhaust air duct as close to the outlet grille as possible serves the purpose very well.

Again, the high-limit controller is optional but generally recommended.

Glossary of Symbols

EA	Exhaust Air
E-P relay	Electric-Pneumatic relay
H	Humidity controller
M	Damper motor
MA	Mixed air
NC	Normally closed
NO	Normally open
OSA	Outside Air
RA	Return Air
T	Temperature Controller

System 3

This system is similar to the previous one. It also shows 100% outside air and preheat and reheat coils. But here two humidifiers are used and are controlled in sequence from a single space or exhaust air duct humidity controller. The two humidifiers are indicated as V-1 and V-2.

V-1 will deliver one-third of the total capacity with a 4 to 7 psig spring range. V-2 is sized for two-thirds of the capacity, with a spring range of 8 to 13 psig. This sequencing control arrangement allows closer moisture input control, particularly when operating conditions vary considerably from design, thus preventing the possibility of overrun and duct saturation. With milder outdoor air conditions, V-1 can satisfy space conditions by introducing only a portion of the total design capacity.

As the outdoor air becomes colder and drier, humidifier V-1 will not satisfy demand so the V-2 unit starts to open in response to the additional demand. This gives much closer control in all kinds of outside air conditions, as well as preventing a supersaturated condition in the duct at minimum design. Again the high-limit controller is optional but desirable.

System 2

Figure 32-1.
100% OSA heat-vent system with primary humidification.

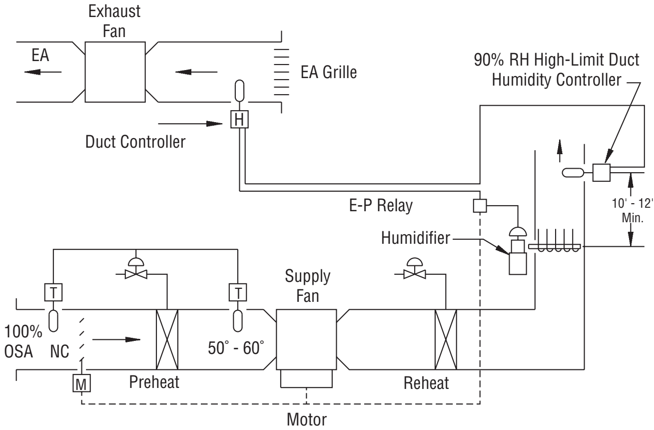

System 3

Figure 32-2.
100% OSA heat-vent system with sequence control
on primary humidification.

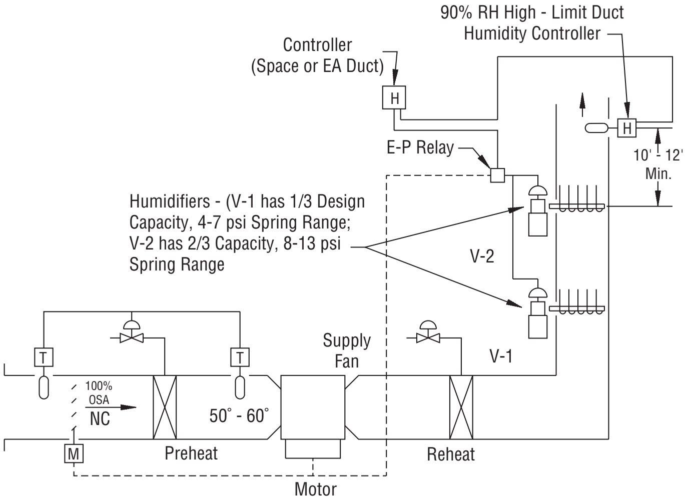

System 4

Here is another 100% outside air system. In this case, the air leaving the preheat coil is held at a constant dry-bulb temperature in the 55° to 60°F range. This system indicates the use of two humidifiers—one as a primary humidifier and the second as a booster or secondary humidifier.

This system allows a primary humidifier to be controlled directly from a duct humidity controller at a level high enough to maintain a space condition of about 35% RH at a space temperature of 75°F. The booster unit, located downstream from a reheat coil and fan, can then be sized and controlled to produce the necessary moisture to raise the space RH from 35% to some higher condition, say 55%, where and when desired. This allows individual humidity control for each zone at a higher level than otherwise possible.

This is an important combination because the use of the primary unit allows the capacity of the booster unit to be small enough so that super saturation and visible moisture may not occur, even when the units are located as close as three feet from the discharge grille. For more information, consult your local Armstrong representative or download Armstrong's Humid-A-ware™ Humidification Sizing and Selection software at www.armstrong-intl.com.

In this typical air handling system, it would not be psychrometrically possible to introduce enough humidity into the air temperature downstream from the preheat coil to give the maximum required condition in excess of 35% RH in the space. See Example 2, Page 15. The use of both primary and booster humidifiers is the only method for controlling the relative humidity in space at any level above approximately 35%.

System 5

Here is a single zone packaged heating and ventilating unit with internal face and by-pass dampers. The humidifier should be positioned downstream from the mixing dampers so that moisture is introduced into the final leaving air temperatures of the heating ventilating unit. This location permits a high level of space relative humidity to be maintained without duct saturation. This humidifier location is preferred compared to just ahead of the coils because of higher air temperature and better mixing conditions. Again a high-limit controller is recommended to prevent possible duct saturation, installed 10 to 12 feet downstream from the humidifier.

System 4

Figure 33-1.
100% OSA heat-vent system with primary and booster humidification.

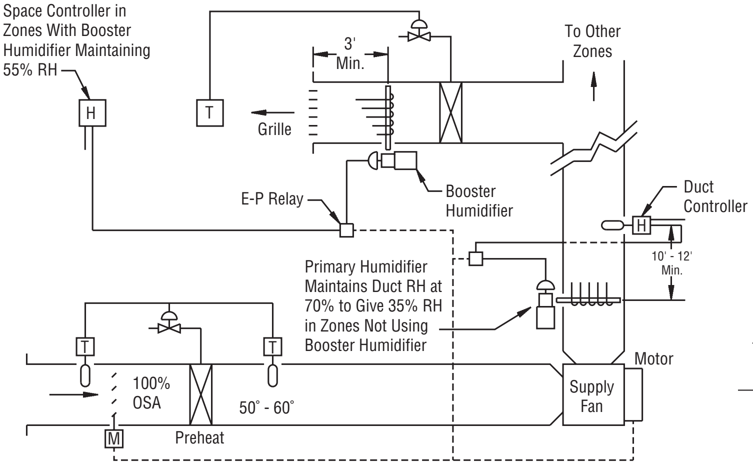

System 5

Figure 33-2.
Single zone heat-vent unit with internal face and by-pass dampers—primary humidification.

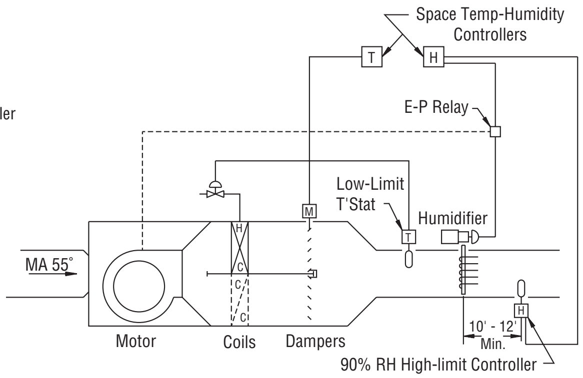

System 6

This is a multi-zone heating/ventilating unit with face and by-pass dampers on each zone. The example shows a method and location for primary humidification, but it should be restricted to design conditions of "comfort humidification" of, say, 35%. These systems are normally package units and it is standard practice to incorporate the humidifier ahead of the coils as shown. This location of the humidifier will provide equal moisture distribution in hot or cold decks before heat zone takeoff, but it does limit the amount of moisture that can be added to the 55° air. Design conditions above 35% RH risk impingement of visible vapor on the coils. See Example 2, Page 15.

With these units, it is sometimes possible to use two humidifiers at this location with baffles between zone takeoff and sized for different conditions of relative humidity in their respective sections. Booster humidifiers can be used in individual zones for a higher relative humidity where required.

Glossary of Symbols

EA	Exhaust Air
E-P relay	Electric-Pneumatic relay
H	Humidity controller
M	Damper motor
MA	Mixed air
NC	Normally closed
NO	Normally open
OSA	Outside Air
RA	Return Air
T	Temperature Controller

System 7

Here is a high-velocity dual duct system with primary and booster humidification shown. Like System 6, the primary humidifier is capable of providing "comfort humidification" only—30% to 35% RH. Because of space limitations, the primary humidifier, sized to maintain a duct condition of, say, 90% RH in the mixed air temperature, can be located as shown ahead of the fan. The humidifier should be located as far as possible upstream—no closer than three feet from the face of the supply fan—to ensure good air mixing and to allow the duct controller ample time to sense the condition short of saturation. The use of multiple manifolds will help provide good air mixing.

Note that the primary humidifier in this case should not be controlled from a space controller or an exhaust air duct controller, but rather from the supply duct controller as indicated. Since each zone has its own temperature-controlled mixing box, a location of the primary humidifier controller in the space or exhaust duct could not provide accurate control. Further, the distance between the humidifier and the controller could cause delayed response or override.

System 6

Figure 34-1.
Multi-zone heat-vent unit with internal face and by-pass dampers for each zone—primary humidification.

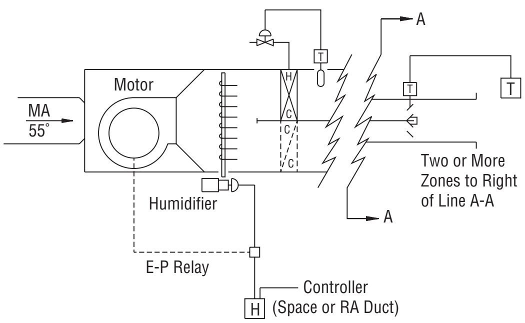

System 7

Figure 34-2.
High-velocity dual duct system with primary and booster humidification.

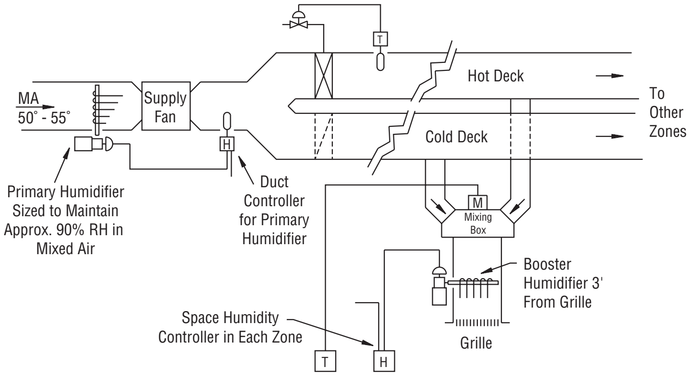

Packaged Air Conditioner Installations

Humidifiers frequently must be installed in packaged central station air conditioners. This can present some unusual location requirements due to the close quarters within the packaged units.

In the horizontal discharge draw-thru type packaged unit shown in Figure 35-1, the recommended location of the humidifier is at the fan discharge. In some instances this may not be possible. Note that with the alternate location, the humidifier manifold is installed to discharge upward into the area of greatest air turbulence. This permits the air to achieve optimum mixing before reaching the fan blades. A high-limit controller, set at 80%, should be located as shown when the humidifier is installed at the alternate location.

Recommended humidifier locations for a vertical discharge draw-thru type air conditioner (Figure 35-2) are identical to the horizontal unit. If the alternate location must be used, a high-limit controller set at 80% is desirable. The humidifier manifold should discharge upward, as with the horizontal discharge unit.

Figure 35-1.
Horizontal Discharge
With humidifier installed at recommended location, high-limit duct controller should be set at 90% RH maximum—alternate location at 80% RH maximum.

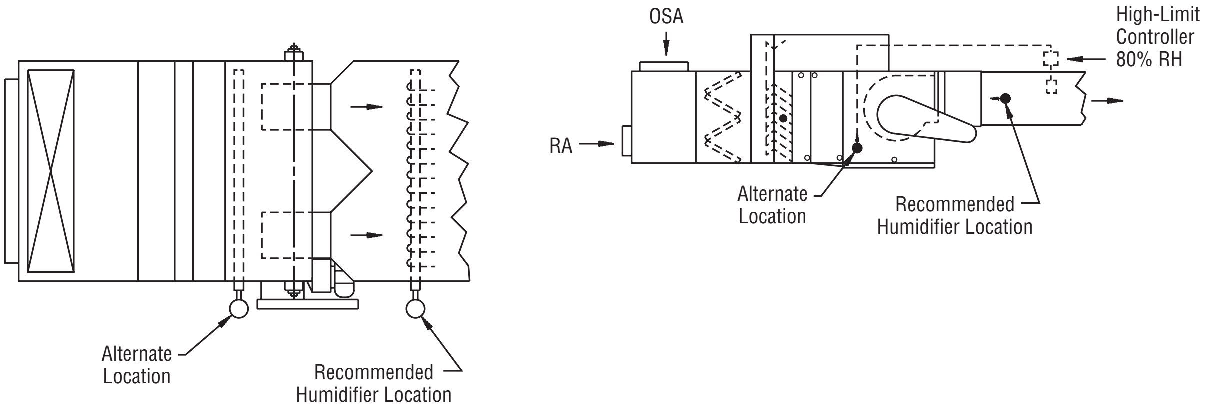

Figure 35-2.
Vertical Discharge

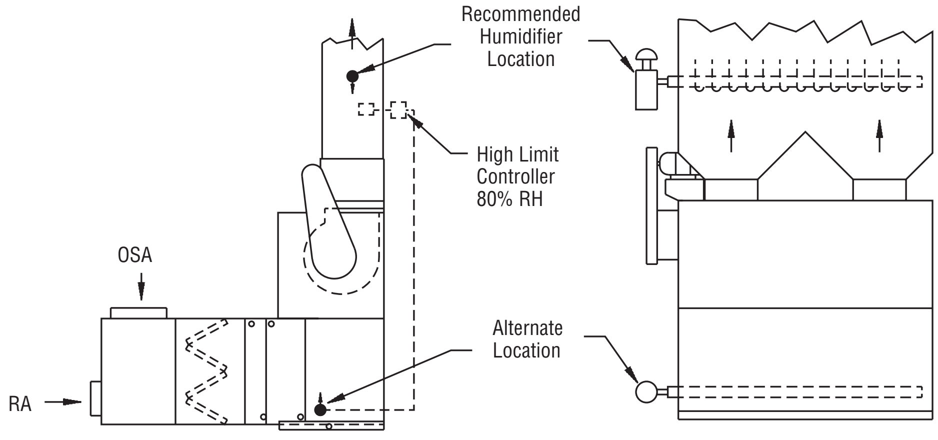

Steam Humidifiers in Central Systems, continued...

In a low pressure blow-thru type, multi-zone, packaged air conditioner (Figure 36-1), the recommendations are much the same. However, to avoid overloading the cold deck and to avoid impingement of discharge, the manifold is installed to discharge upward instead of directly into the fan discharge.

As with the draw-thru units, a high-limit controller set at 90% should be installed. In a high pressure blow-thru type packaged unit (Figure 36-2), again the recommended location is as close to the fan as possible, with the manifold discharging directly into the fan discharge. A high-limit controller set at 90% is desirable.

In either high or low pressure systems, where the humidifier is installed at the alternate location, set the high-limit humidity controller at 80% RH.

Figure 36-1.
Low pressure system

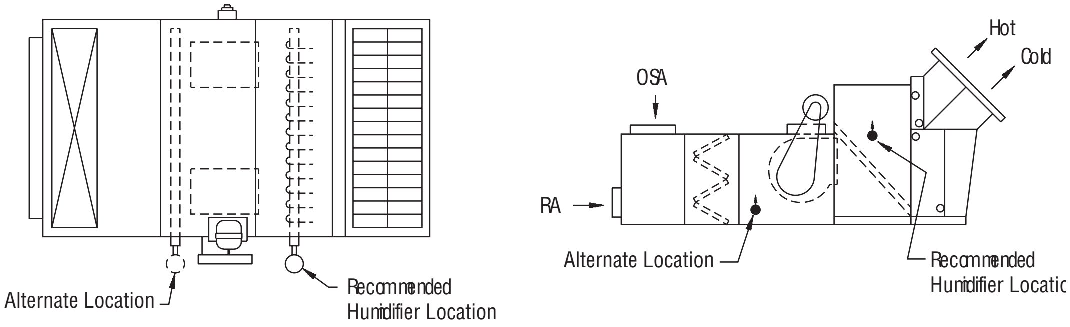

Figure 36-2.
High pressure system

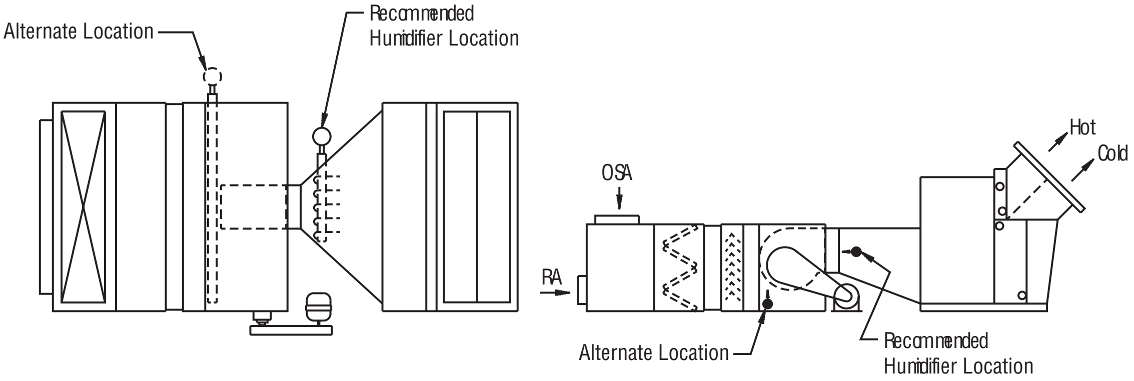

Installation Do's and Don'ts

In discussing the systems, we mentioned a few location "do's and don'ts." Let's review these precautions that may help to keep you out of trouble. For example, whenever possible, install the distribution manifold downstream from coils. If you have more than three feet of distance available between the manifold and the coil on the upstream side, the manifold can be installed at this location (greater than three feet for higher velocity systems).

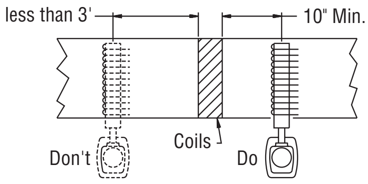

When it is necessary to place the humidifier in the coil section ahead of the fan, locate the manifold in the most active airflow and as far upstream from the fan inlet as possible.

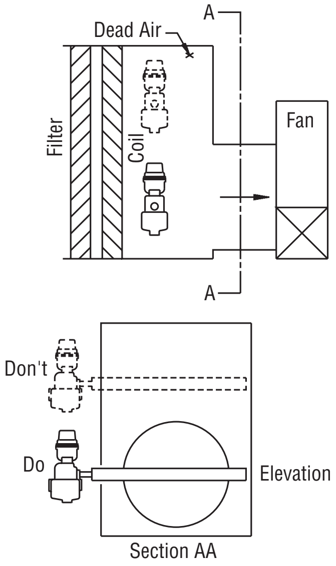

Don't risk restriction of the airflow in ducts 8" or less in depth. Use an expanded section as shown.

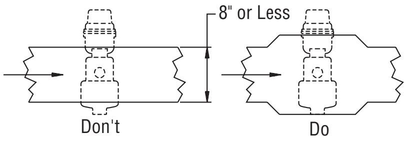

When it is necessary to place the humidifier discharge into a packaged multi-zone air handling system, install the distribution manifold into the center of the active air flow and as close to the fan discharge as possible.

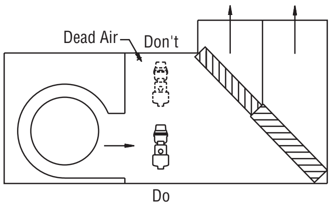

Do not install a distribution manifold closer than 10 feet upstream from a temperature controller or you may get false signals.

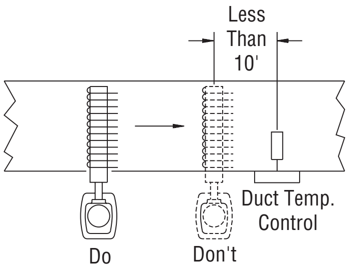

The distribution manifold should never be placed within three feet of an air fan intake. The best location is at the fan discharge.

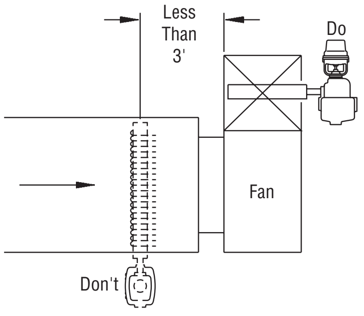

Whenever possible, install the distribution manifold into the center of the duct.

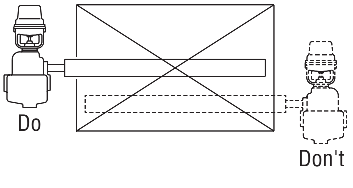

Always install distribution manifolds as far upstream from discharge air grilles as possible—never less than three feet upstream.

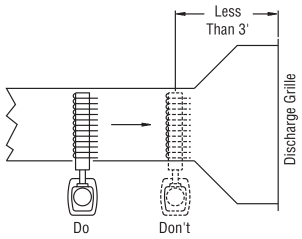

Always size and install the distribution manifold to span the widest dimension of the duct section.

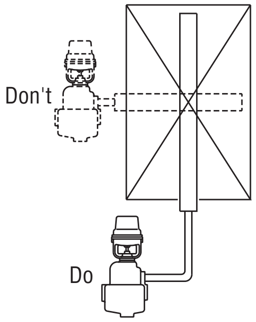

Always select the stream distribution manifold length that will span the maximum width of the duct.

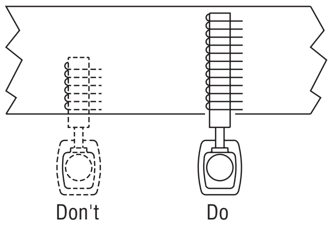

The manifold should never be installed vertically downward from the humidifier. This presents a condensate drainage problem in the jacket of the manifold. Vertical upward installation is permissible.

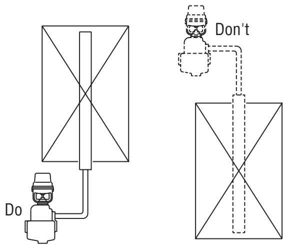

NOTE: All dimensions shown in the above figures are based on duct temperature of 65°F or higher and duct velocities of 800 ft/min, or lower. If duct air is cooler or velocities are higher, these dimensions should be greater or multiple manifolds considered.

Application of Unit Humidifiers for Direct Discharge

A survey of your requirements should be taken to determine the amount of steam needed for humidification, the number, size and type of units required, and the location of both humidifier and humidity controllers.

Sizing and Location with Natural Ventilation

These are the average industrial humidification applications with:

Room temperatures—65° to 80°F.
Relative humidities—35% to 80%.
Natural ventilation—i.e., infiltration around windows and doors.

Selection Data Required

Minimum Outdoor Temperature: For most jobs, figure 10°F above the lowest recorded temperature for your locality. The lowest temperatures are seldom encountered for more than a few hours.

- Indoor Temperature
- RH Desired
- Pressure of Steam Available for Humidification
- Number of Cubic Feet in Room
- Air Changes Per Hour: air changes taking place under average conditions exclusive of air provided for ventilation or regain of hygroscopic materials.

Rooms, 1 side exposed______________1
Rooms, 2 sides exposed__________1-1/2
Rooms, 3 or 4 sides exposed _________2
Rooms with no windows or
outside doors _____________1/2 – 3/4

Typical Problem:
Design outdoor temperature ________0°F
Indoor temperature_______________70°F
RH required ____________________40%
Air changes per hour ________________2
Steam pressure available__________5 psi

Room size 400' x 160' with 10' ceiling
Natural ventilation
Heated by: Unit heaters-fan on-off control

Step I: Steam required for humidification. Our room contains (400' x 160' x 25') or 1,600,000 cu ft.

From the 70°F Table 38-1, read across from 0°F outside temperature to the 40% RH column where you find the figure .409 lbs of steam/hour per 1,000 cu ft of space for each air change. Then, 1,600 times .409 times 2 equals 1,309 lbs of steam/hour installed humidification capacity required.

Step II: Electric or air-controlled units. The large floor area calls for multiple humidifiers. No explosion hazard has been specified so use of air-controlled units is not required. Electric units are recommended.

Step III: Number of humidifiers for job. Divide steam required by capacity of humidifiers at steam pressure available.

Step IV: What size humidifier to use. For this example, a large number of smaller capacity units is recommended. Larger capacity units could cause condensation on the low ceiling. Also, because of the large floor area, the humidistats for fewer units would be widely spaced which could result in less accurate control than desirable.

Step V: What type humidifier to use. In this example, integral fan units are preferable to steam jet units installed in conjunction with unit heaters. Since the unit heater fans are on or off to control temperature, it follows that the humidistat may call for steam when the nearest unit heater is not running. With the low ceiling, the discharge from a steam jet humidifier might rise to the ceiling and produce condensation. Therefore, the integral fan type should be used.

Step VI: Location of humidifiers. Several patterns are possible, and actual location can usually conform with the existing steam supply and return lines to make an economical installation with a minimum of new piping.

Pounds of steam per hour, per air change for each 1,000 cu ft of space to secure desired indoor relative humidity at 70°F with various outdoor temperature (outside air 75% saturated).

Table 38-1. 70°F Humidification

Outdoor	70°F - Relative Humidity Desired Indoors - 70°F										
Temp.	25%	30%	35%	40%	45%	50%	55%	60%	65%	70%	75%
*30	.079	.136	.194	.251	.309	.367	.424	.482	.539	.597	.654
20	.154	.212	.269	.327	.385	.441	.499	.557	.615	.672	.730
10	.204	.262	.319	.377	.434	.492	.549	.607	.665	.722	.780
0	.237	.294	.352	.409	.467	.524	.582	.639	.697	.754	.812
-10	.257	.314	.372	.430	.487	.545	.602	.660	.717	.775	.832
-20	.270	.327	.385	.442	.500	.557	.615	.672	.730	.787	.844

In our problem of a 400' x 160' x 25' room, there would likely be steam lines along both sides of the room, and humidifiers can be located as shown in black in Figure 39-1. If the supply lines run down the center of the room the line pattern would be practical. Runouts to integral fan units in a 160' wide room would be about 20' long. If the room were only 60 or 80 feet wide, runouts need be no longer than required for actual hookup.

Step VII: Location of humidistat. This should be from 20 to 30 feet away from the humidifier and slightly to one side of the air stream from the unit. The humidistat should "see" its humidifier and be in "active" air. Do not hide it behind a post or in the channel of an H-beam. It must get a good sample of the air to control the humidity.

Sizing and Location with Forced Ventilation

Typical Jobs: Mill and sanding rooms in furniture factories. Here, the problem of selecting and installing humidifiers is much the same as previously described except for:

1. Determining the number of air changes.

2. Location of humidifiers and humidistats.

Air Changes: These can be determined from the exhaust fans' capacities. The cubic feet per hour capacity of the fans, divided by the cubic feet of space to be humidified, will give the number of air changes.

Where the capacity of fan or fans is not known, air changes can be measured with velometer readings at all open doors, elevator shafts, etc. leading to the room and with fans operating at full capacity. Your Armstrong Representative can determine air changes for you.

Humidifier Location: Bear in mind that humidifiers will have to control the humidity 24 hours a day, seven days a week during the heating season. Exhaust fans may operate only 40 hours or 80 hours per week. Thus the humidifiers and humidistats must be located for good distribution of humidity during fan-off periods as well as when the fans are operating.

Figure 39-1. Where practical, locate humidifiers to minimize piping. Locations shown in black where steam supply lines are along outer walls; in white where supply is in center of room.

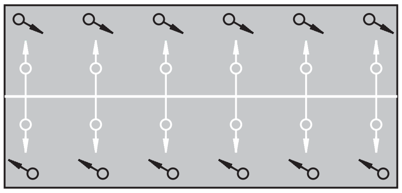

Figure 39-2. Outlines a typical requirement. Schematic layout of humidifiers in wood-working plant where exhaust fans are used. Arrows indicate air flow induced by fans. Humidifiers are sized for load conditions imposed by fan. Humidifiers are located to give uniform distribution of humidity when fans are off or when fans are running.

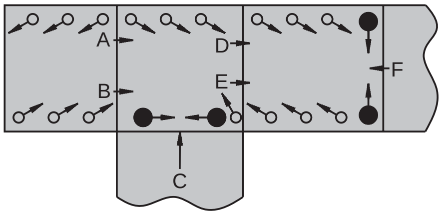

Pounds of steam required per hour per air change for each 1,000 cu ft of space to secure desired indoor relative humidity at 75°F with various outdoor temperatures (outside air 75% saturated).

Table 39-1. 75°F Humidification

Outdoor Temp.	75°F - Relative Humidity Desired Indoors - 75°F										
	25%	30%	35%	40%	45%	50%	55%	60%	65%	70%	75%
*30	.129	.196	.264	.331	.399	.466	.533	.601	.668	.736	.803
20	.204	.271	.339	.406	.474	.541	.609	.676	.744	.811	.879
10	.254	.321	.389	.456	.524	.591	.659	.726	.794	.861	.929
0	.286	.354	.421	.489	.556	.624	.691	.759	.826	.894	.961
-10	.307	.374	.442	.509	.577	.644	.711	.779	.846	.914	.981
-20	.319	.387	.454	.522	.589	.657	.724	.792	.859	.927	.994

*Note: When outdoor design temperatures exceed 30°F, use Table 7-1, Page 7.

Sizing for High or Low Temperature Humidification

Where air temperatures are well above 75°F or below 70°F, it is impractical to use Tables 38-1, Page 38, or 39-1, Page 39. Humidification requirements must be figured from Table 7-1, Page 7, showing grains of water per cu ft of saturated air at various temperatures. Typical problem: How much steam per hour is required to humidify 60,000 cu ft of space with four air changes per hour to 40% RH when the air temperature is 90°F? Assume that any makeup air will come from outdoors at 0°F, 75% saturated.

90°F saturated air = 14.9 gr/cu ft saturated = 5.976 gr/cu ft at 40% RH

Outdoor air 0°F saturated = .475 gr/cu ft

75% saturated = .356 gr/cu ft

5.976 minus .356 = 5.620 grains to be added per cu ft

$$\frac{5.620 \times 1{,}000}{7{,}000} = .803 \text{ lb per M cu ft per air change}$$

NOTE: 7,000 gr = 1 lb

With four air changes in a 60,000 cu ft room, then .803 x 60 x 4, or 193 lbs steam would be required per hour. Humidifier capacity required for temperatures below 70°F is determined in exactly the same manner.

NOTE: For high temperature air in particular, air volume changes dramatically with RH. Armstrong Humid-A-ware™ Humidification Sizing and Selection Software will provide greater accuracy in humidifier sizing for these applications.

Explosion Hazard Humidification

Sizing air-operated humidifiers for areas where explosion hazard exists is done exactly as for other requirements except that they should be sized for the most severe conditions of makeup air, RH required and minimum steam pressure.

Humidifiers should be located to get the best possible dispersal and distribution of vapor in the area.

Special Purpose Industrial Applications

In some industrial operations, a stratum of high relative humidity is required in close proximity to a fast moving sheet or film of paper, thin gauge plastic, fabric, cellophane, etc. The objective may be to prevent accumulation of static electricity charges, or to prevent loss of moisture from the material. If the sheet or film is hot, as it very well might be, it tends to give up its moisture very quickly. By using steam shower humidifiers expressly adapted for this application to create a laminar zone of high humidity adjacent to the sheet, moisture loss is prevented and moisture content of the material is properly maintained.

For this application, the humidifier must be interlocked with the drive of the machine, and it is essential that the steam be discharged in a dry state, with no water droplets or liquid spray.

Considerations in Selection of Cool Fog Systems

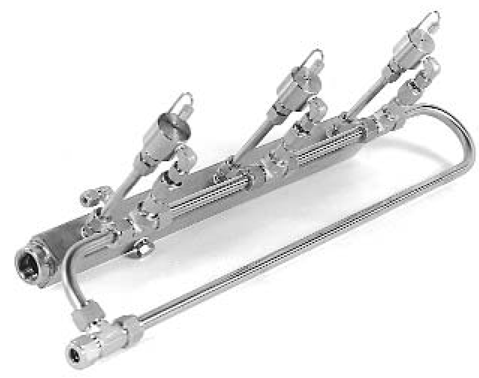

Unlike other Armstrong humidification products, selection and sizing of Cool Fog system components is performed almost exclusively “in house.” The selection process requires detailed information for each application that must be supplied by the customer.

Water Quality and Materials of Construction:

Cool Fog Systems (CF) may be used with potable tap water if the levels of calcium and other dissolves solids are not excessive. If water testing indicates that purification is required, a reverse osmosis water treatment system should be considered. The “CF” designation indicates that the fogger manifold bars are made of copper tubing with 316 SS foggers, and the water valves are made of brass.

When de-ionized water is required for laboratory or clean room humidification, Pure Fog Systems (PF) should be used. The “PF” designation indicates that the fogger manifolds, bars, foggers, and water valves are made of stainless steel.

Figure 41-1. Air Handling Unit Side View

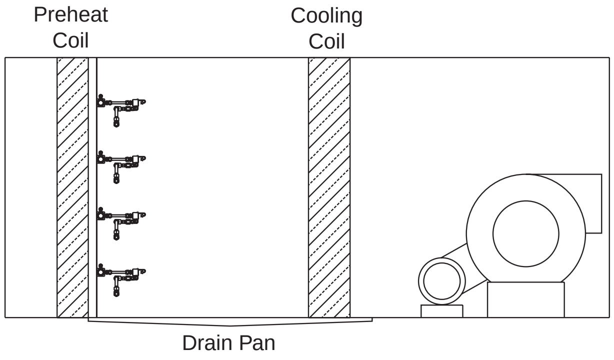

Figure 41-2. Fog Chamber Side View

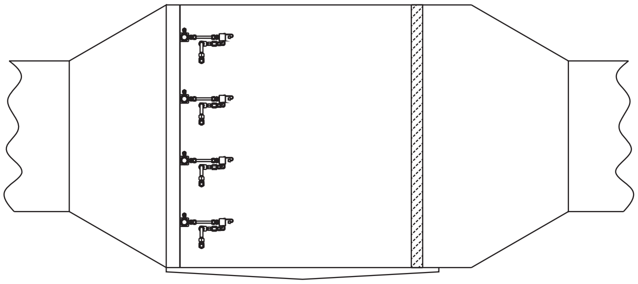

Fogger Location:

Foggers may be applied in air handlers or ducts where the air velocity is less than 750 FPM. For duct applications, if the air velocity is in excess of the recommended maximum, a fogging chamber with fog eliminator and drain pan should be considered.

When a fogging system cannot be practically applied to the existing mechanical system, a Direct Area Discharge Fogging System (DDF) might be the logical alternative. The “DDF” designation indicates that foggers are individually located within an enclosed area such as a warehouse or factory floor, and fog is directly discharge into the open space.

Control Types:

The Standard Proportional Control System (STD) simultaneously modulates both air and water output pressures to modulate humidification output while maintaining a fixed air/water differential. This type of system is most appropriate for small to medium air handler systems where compressed air consumption is not a critical consideration.

For larger air handler systems where compressed air consumption can be a significant expense, the Variable Differential Control System (VDC) should be considered. Because the “VDC” system proportionally reduces the air/water output differential along the upper half of the control range, the compressed air consumption is reduced by as much as 50% reducing the required air compressor size and operating cost.

For air handlers with stable loads and fixed outside air percentages, the HumidiComp (HC) “On/Off” Control System is an economical alternative to the STD or VDC systems.

Direct Area Discharge Fogging systems (DDF) are controlled by “ON/OFF” control panels, which do not modulate the fog output as in the Standard Proportional or Variable Differential Control panels.

All control panels require a control input (on/off, 4-20 mA, or 0-10 vdc) that is typically supplied by the Building Automation System.

Figure 41-3. Direct Area Discharge Fogging System (Side View)

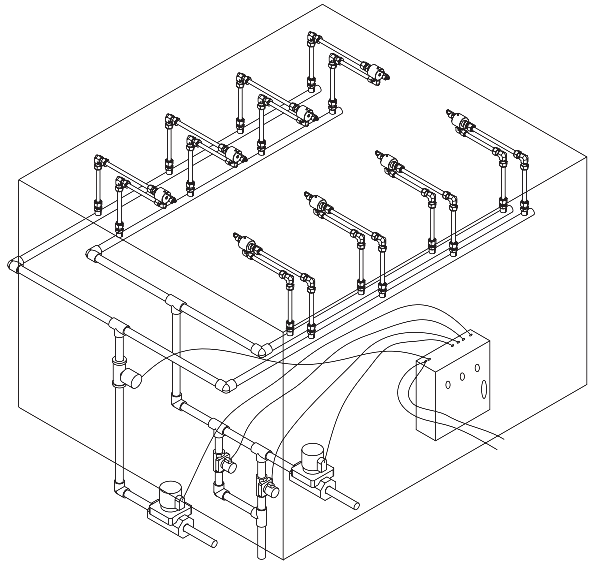

A properly applied fogging system will meet the following requirements:

1. Air entering the fogging chamber must be warm enough and slow enough.
2. Adequate evaporation distance must be available.
3. The compressed air plant must supply adequate PSIG and SCFM of clean air.
4. The water system must supply adequate PSIG and GPM of clean water.
5. Un-evaporated water and dissolved solids need to be removed from the air stream.

Air Temperature and Preheat:

As illustrated in Figure 18-1, Page 18, when atomized water is evaporated into an air stream, there is a dry bulb cooling effect. The magnitude of the dry bulb cooling depends on the evaporation rate of the water. This is determined by the actual output of the fogger heads and the evaporation efficiency.

In order to discharge the supply air at the desired dry bulb temperature and relative humidity, the air entering the fogging chamber (i.e. mixed air) must be mixed or preheated to the wet bulb temperature of the desired supply air. This requires that the mixed air damper and/or preheat coil be proportionally controlled.

Although each application is different, minimum incoming air temperature requirements for air handlers with economizer are 60-65°F. For make-up air units, it is not unusual for air to be pre-heated to 100°F or more.

Air Velocity:

The air velocity in the fogging chamber of an air handler must be slow enough to allow adequate time for the atomized water to evaporate before leaving the fogging chamber and impinging on any downstream surfaces (500 FPM or less is optimal). See Figure 41-1, Page41.

Airflow in ducts is typically too fast. Therefore, duct applications usually require a “Fogging Chamber” that is of adequate height and width to reduce the FPM to an acceptable level, and of adequate length to allow the fog to evaporate. See Figure 41-2, Page 41.

Evaporation Area:

Because there is usually little air movement near the fogger heads in Direct Area Discharge Fogging (DDF) applications, 200 cubic feet of free space and a 10 foot vertical drop to the nearest surface are minimum requirements. See Figure 42-2.

Evaporation Efficiency AND Fog Elimination:

Some applications do not allow enough fog chamber length to assure 100% evaporation of the fog.

Figure 42-1. Standard Proportional Control/ Variable Differential Control

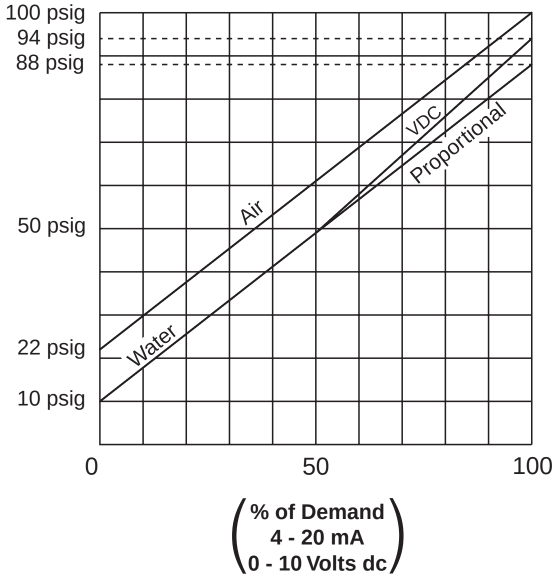

Figure 42-2. Direct Area Discharge Area View

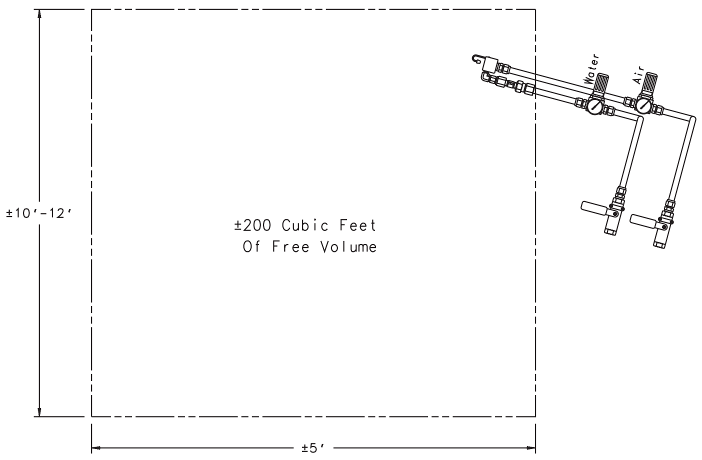

For air handler or duct installations where no un-evaporated fog can be allowed downstream of the fogging chamber, a cooling coil with drain pan or a “fog eliminator” with drain pan will be required. See Figure 41-2, Page 41.

No practical means of catching unevaporated fog exists for direct area discharge applications. Therefore,direct area discharge (DDF) systems should not be used in clean room environments where unevaporated fog could cause potential damage to sensitive processes or products.

Water Supply:

Adequate water pressure and capacity (GPM) must be consistently available to supply the waterside of the fogger manifold bars.

Only in rare cases is tap water determined to be of adequate purity for fogging. In such cases an air filter needs to be installed downstream of the fogging chamber to catch dissolved solids that do not evaporate with the water.

Compressed Air Supply:

Clean air must be available in sufficient capacity (SCFM) and pressure to supply the airside of the fogger manifold bars. An oil filled, rotary screw compressor with pre-filter and 4-stage final filter is a minimum requirement.

Instrument Air:

Standard proportional and variable differential control panels require an “instrument air quality” pneumatic supply. ON/OFF Panels require no pneumatic supply.

Figure 43-1. Standard Proportional Control (STD) or Variable Differential Control (VDC)

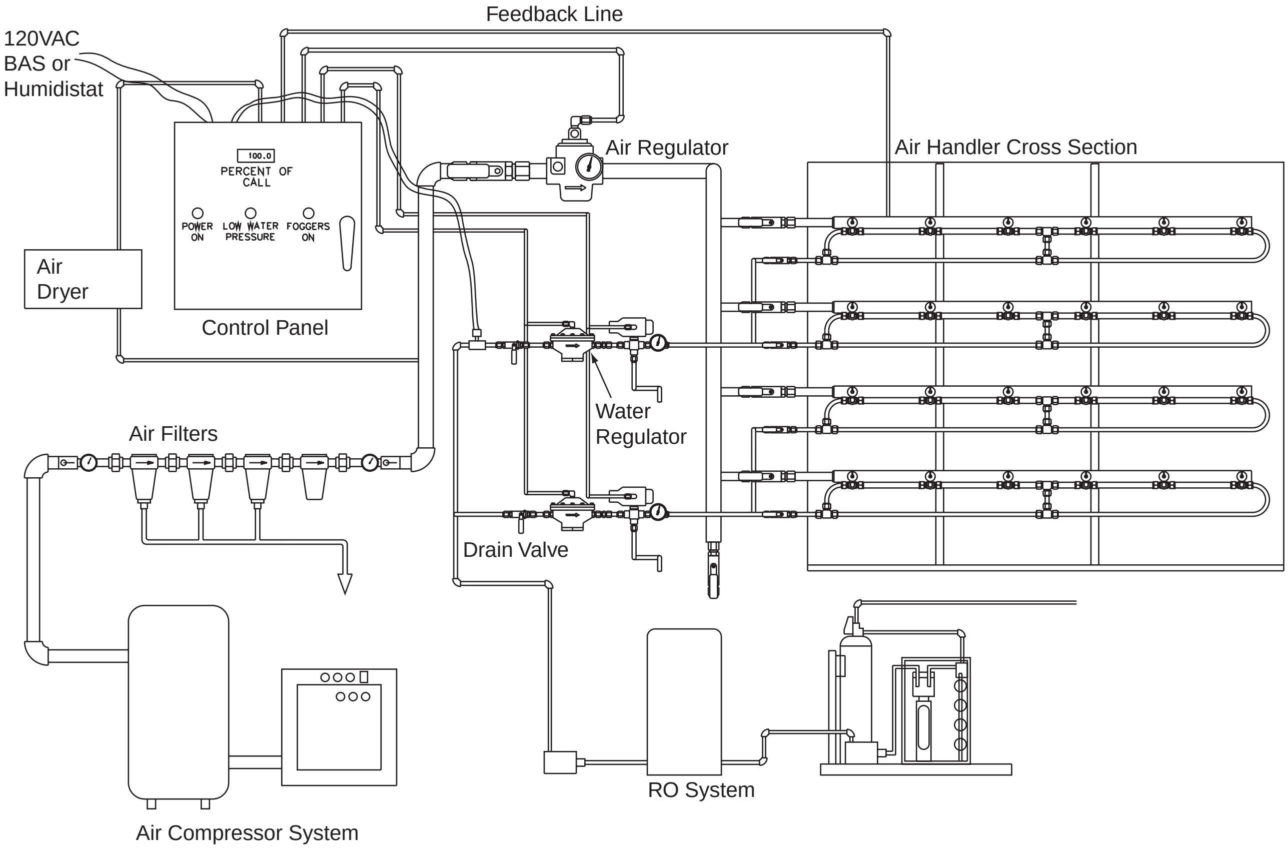

Cool Fog Sizing

Sizing humidification loads for fogger systems differ from steam humidification systems in several ways.

Fogging humidification systems require outside air to be pre-heated, or mixed, to the WB temperature of the supply air.

Steam humidification systems require outside air to be preheated, or mixed, to the DB temperature of the supply air.

Due to the dry bulb cooling effect of fogging systems, air must be mixed or preheated to a higher dry bulb temperature than with steam systems. While this does not effect the actual load, it is an important part of the psychrometric evaluation and it does impact the sizing of the pre-heat coil.

Example 1: 100% outside air, assume:
10,000 CFM outside air at 0°F and 40% RH needs to discharge from an air handler at 55°F and 49% RH in order to maintain a 70°F @ 40% RH in the zone.

As in the steam sizing example on Page 28, The load is 246 lbs./hr for both steam and fogger humidification systems. However the air for the steam humidification system only needs to be heated to 55°F before steam is injected into the air stream. For the fogging system, the air needs to be preheated to 82°F in order to discharge at the desired conditions.

Figure 44-1. Example 1: 100% Outside Air

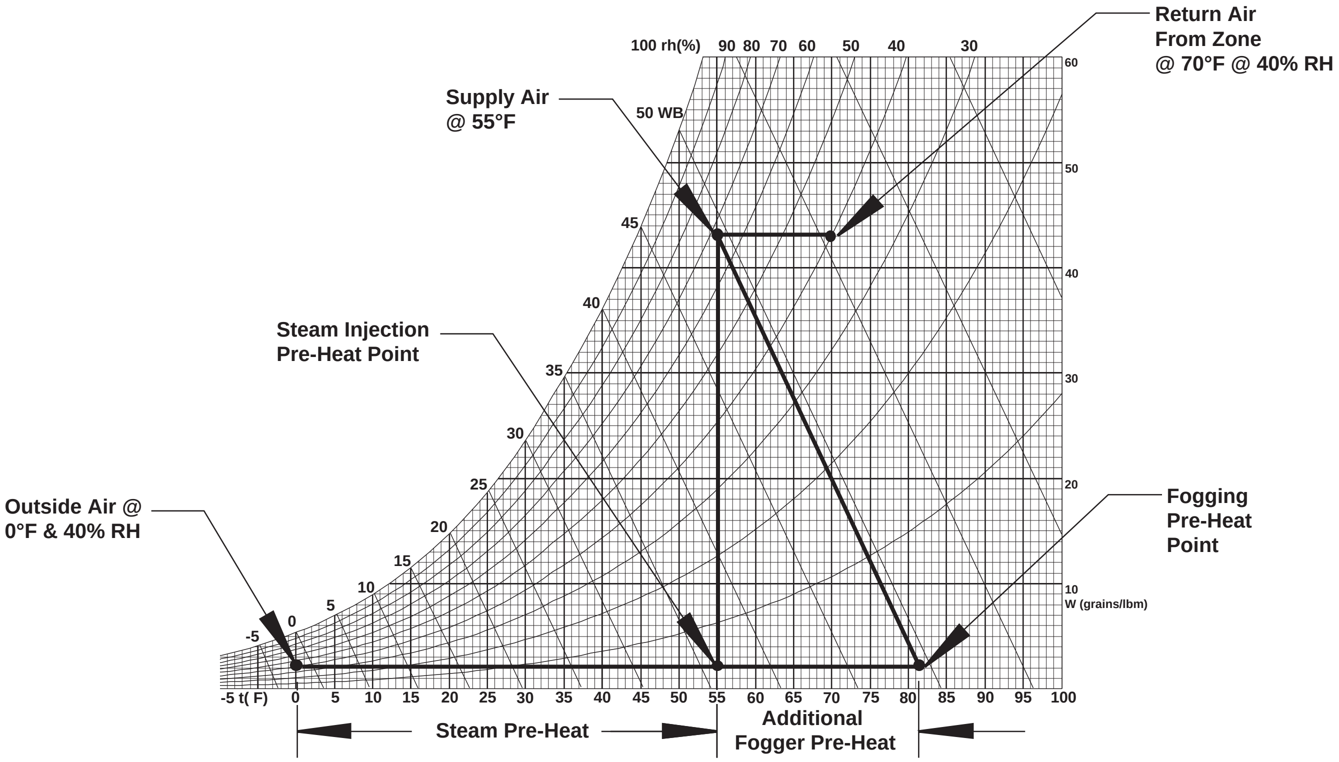

Note: Psychrometric chart representations do not include fan heat gains, duct losses, infiltration losses or cooling coil dehumidification.

Economizer Cycles:

Because fogging systems require outside air to be mixed, or preheated, to the WB temperature of the supply air, less outside air is required to achieve the supply air temperature. This results in a significant reduction in the humidification load.

Example 2: economizer, assume:
40,000 CFM of air in an economizer system with 10% minimum outside air needs to discharge at 55°F to maintain 70°F in the space. The desired space design is 40% RH and the outdoor air design is 40% RH. As in the economizer example on Page 30, the calculated steam load is 456 lbs./hr.

Due to the cooling effect of the fogging system, the required mixed air temperature needs to be 61°F to achieve a discharge temperature of 55°F. Due to the reduction in outside air, the grains added per pound of dry air is reduced from 17.8 for steam to 10 resulting in a load of 258 lbs./hr maximum load for the fogging system.

Figure 45-1. Example 2: Economizer

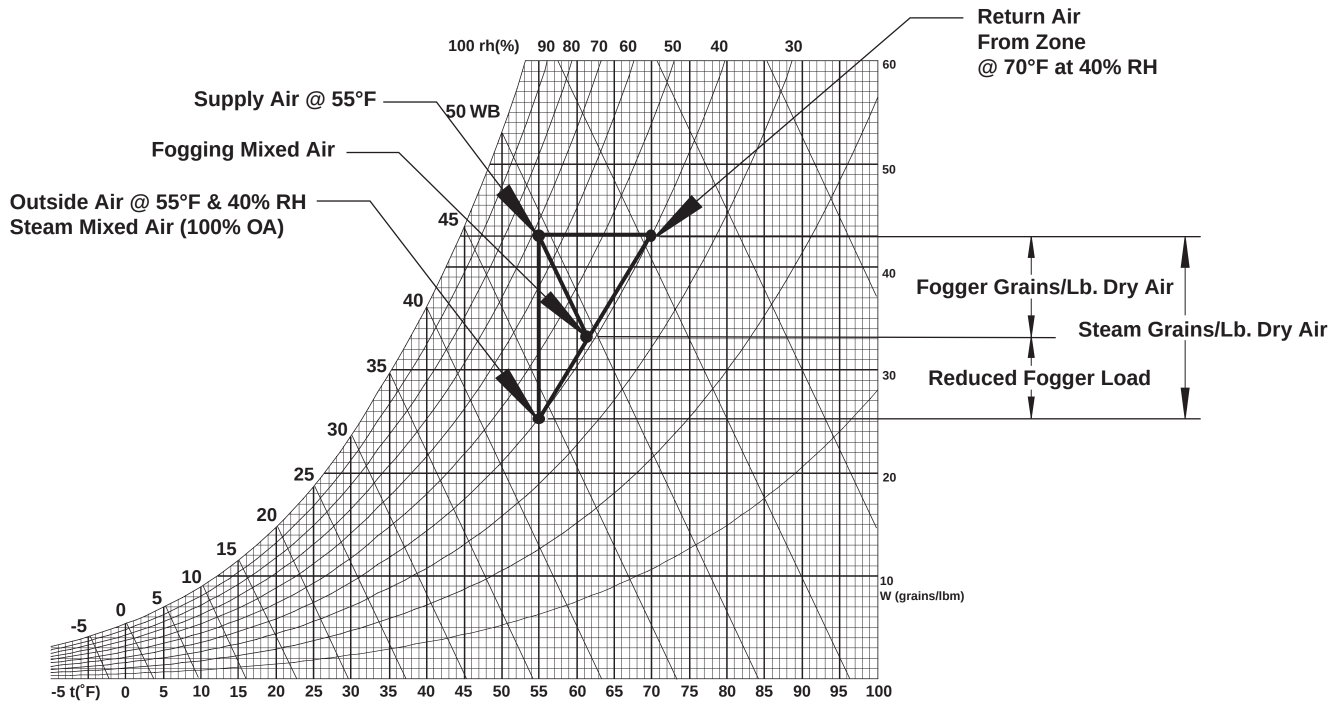

Note: Psychrometric chart representations do not include fan heat gains, duct losses, infiltration losses or cooling coil dehumidification.

Minimum Outside Air and Preheat

When the minimum outside air requirement drives the maximum mixed air temperature below the dry bulb temperature required to achieve a discharge air temperature of 55°F, preheat will be required. This typically happens when outside air requirements are above 20% or the outside air design is below –10°F.

Example 3: preheat, assume:
40,000 CFM of air in an economizer system with 25% minimum outside air needs to discharge at 55°F to maintain 70°F in the space. The desired space design is 40% RH and the outdoor design is –20 F at 40% RH.

The pschycrometric chart indicates that the maximum mixed air temperature that can be attained when the outside air temperature is –20°F is 47.5°F. In this case, the maximum humidification load for both the steam and the fogger system is the same (i.e. 280 lbs/hr). The steam system needs to be preheated to 55°F, whereas the fogger system needs to be preheated to 62.5°F in order to achieve a discharge air temperature of 55°F.

Example 4: Direct Area Discharge, assume:
Room size 400' x 160' with a 25' ceiling
Natural ventilation
Heated by unit heaters

The steam load is calculated exactly the same way as in the steam example on Page 38 (1,309 lbs./hr).

The maximum recommended output per fogger head is 25 lbs./hr, so this application would require 53 fogger heads. Foggers should be evenly distributed and located where adequate evaporation area and vertical drop to the nearest surface are within the recommended minimums. See Figure 42-2. Page 42.

Figure 46-1. Example 3: Preheat

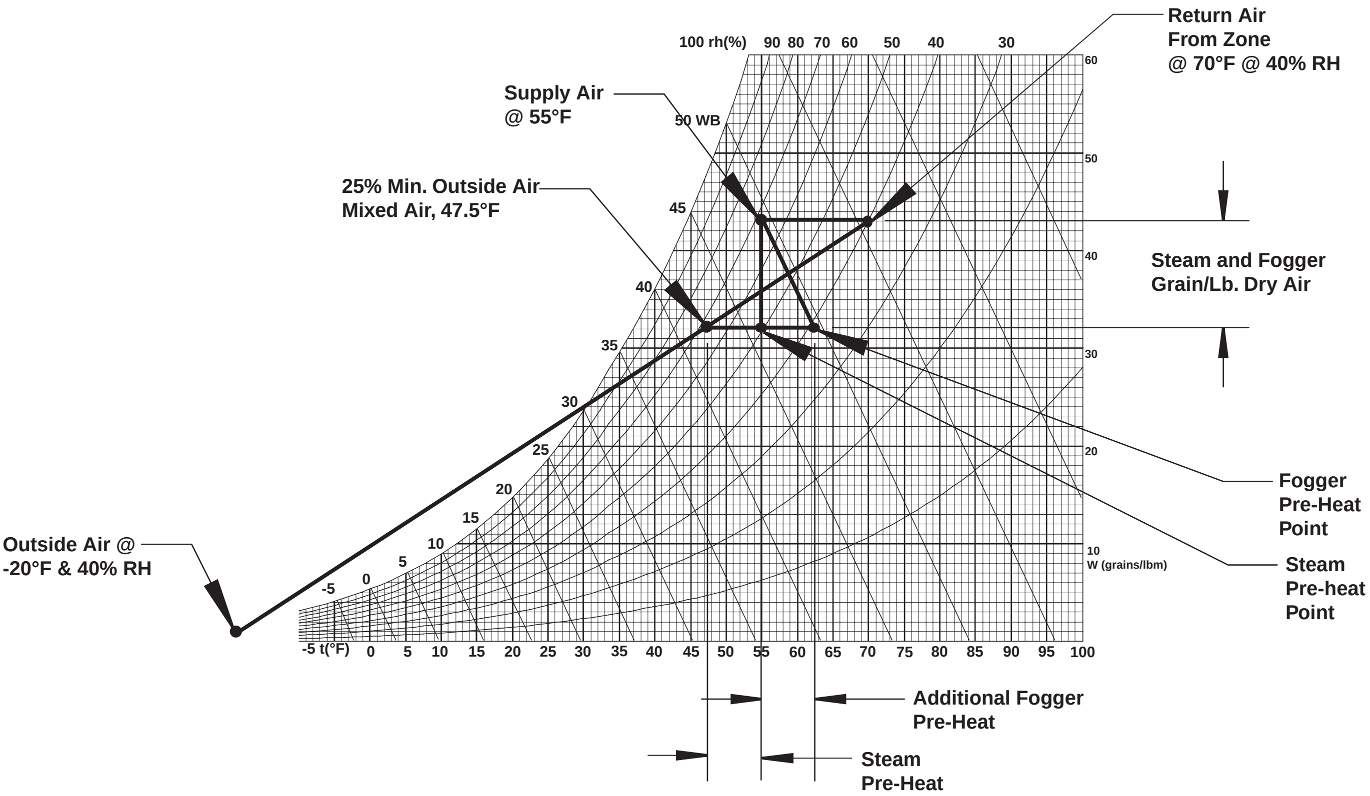

Note: Psychrometric chart representations do not include fan heat gains, duct losses, infiltration losses or cooling coil dehumidification.

Ionic Bed Technology™

Armstrong offers (3) Three Unique Steam Humidification Solutions when Boiler Steam is not available or Chemical Free Steam is desired.

HumidiClean encompasses (3) three forms of steam generating humidifiers: electric, gas, and steam-to-steam.

HumidiClean Humidification from Armstrong begins with the Ionic Bed, a fibrous medium located in the HumidiClean steam generation tank. Simple in appearance, the Ionic Bed offers a practical solution to the traditional goal of minimizing mineral build-up in tanks of self-contained, steam generating humidifiers.

Contractors, engineers, and owners no longer need to focus on adjusting water quality to an acceptable range of conductivity or hardness in order to secure satisfactory humidifier performance.

HumidiClean (electric, gas, or steam-to-steam) humidifiers utilizing Ionic Bed Technology are naturally adaptable to a broad range of water quality. Have hard water? Have softened water? Have reverse osmosis (RO) or deionized (DI) water? It doesn't matter, the versatile HumidiClean line of humidifiers operates perfectly with any type of water.

For additional information on ionic bed technology and the models in which they are supported please refer to pages 113 and 125.

How Armstrong Reduces Humidifier Maintenance Using Ionic Bed Technology

Ionic Beds Stop Solids

Ionic beds consist of a fibrous medium that attracts solids from the water as its temperature rises, minimizing the buildup of solids on the heat exchanger and inner tank walls. Once the ionic beds have absorbed their capacity of solids, an indicator on the humidifier's control panel signals it's time to replace the ionic beds. Changing the beds takes only about 15 minutes. Use of the ionic beds:

- Reduces cleaning of the tank exchanger or heating elements
- Keeps the drain screen cleaner longer – allowing effective tank blowdown
- Helps maintain humidifier output without building excessive heat exchanger surface temperatures
- Requires less frequent blowdown, conserving water and energy
- Eliminates the need for wasteful surface skimmers that must be checked weekly for possible plugging
- Reduces downtime
- Has years of field-proven success in thousands of humidifier applications

Better Here than in your Humidifiers

These photos show how the ionic bed fibers (magnified 52.5x) collect solids throughout their service life. A new ionic bed weighs between 1/3 and 1/2 pound, depending on the humidifier type. When it reaches its capacity, an ionic bed may weigh more than 2-1/2 pounds.

New ionic bed

After 400 hours

After 800 hours

Notes

Conditioned Steam Humidifiers

When It Comes to Improving Humidification… It Starts with Steam

Why the Armstrong Series 9000 humidifier starts with steam

Armstrong's improvements in steam humidification are so fundamentally different they begin not with the humidifier but with the steam.

Unlike other units which simply **disperse** steam, Armstrong's Series 9000 humidifiers work with it, subjecting it to the first of many steps in a carefully engineered process. Why? Because at Armstrong, improving humidification is extremely basic. It starts with steam. And what we've learned at that starting point has taught us how to improve the design of hardware – humidifiers – which distribute steam.

There's no name for what happens to steam in an Armstrong humidifier, so we've created one. We call it **conditioning**. To condition steam, we slow it down, remove its particulate matter, separate condensate from it, dry it and, finally, silence it.

Conditioned steam. It's the cornerstone of the Series 9000's superior performance and control. Here's why.

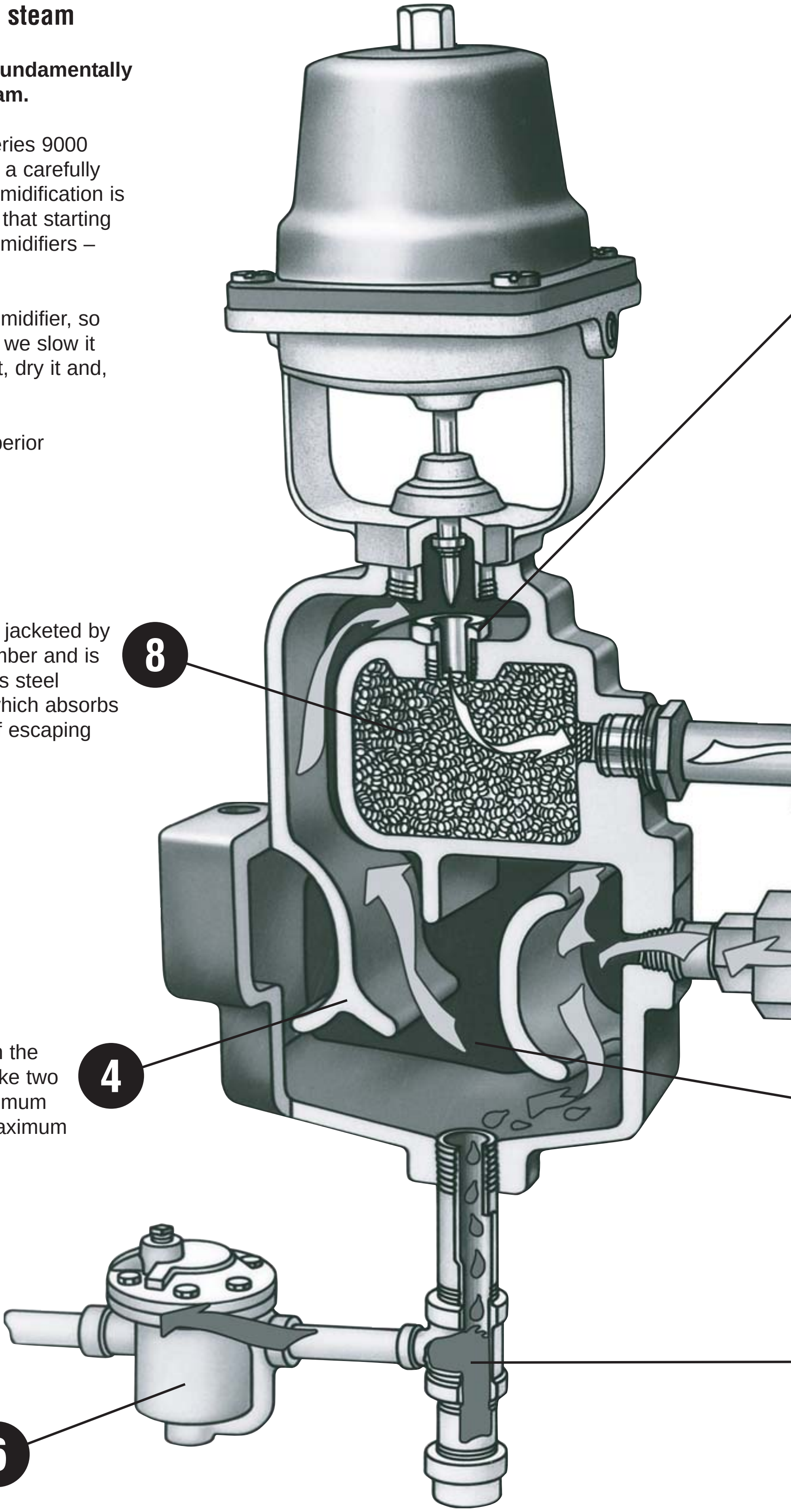

Drying chamber is jacketed by the separating chamber and is filled with a stainless steel silencing medium which absorbs most of the noise of escaping steam.

Interior baffles condition the steam by forcing it to make two 180° turns, providing optimum velocity reduction and maximum separation.

Reliable cast iron inverted bucket steam trap provides dependable draining because it has only two moving parts – and no fixed pivots or complicated linkage to stick, bind or clog.

7 **Internal metering valve** is an integral part of the steam separator and is completely steam jacketed, further preventing condensation through radiation.

1 **Armstrong in-line strainer** with no-crush screen removes most of steam particulate matter.

2 **Steam jacketed distribution manifold** surrounds distribution pipe with steam at supply pressure, reducing condensation due to radiation loss.

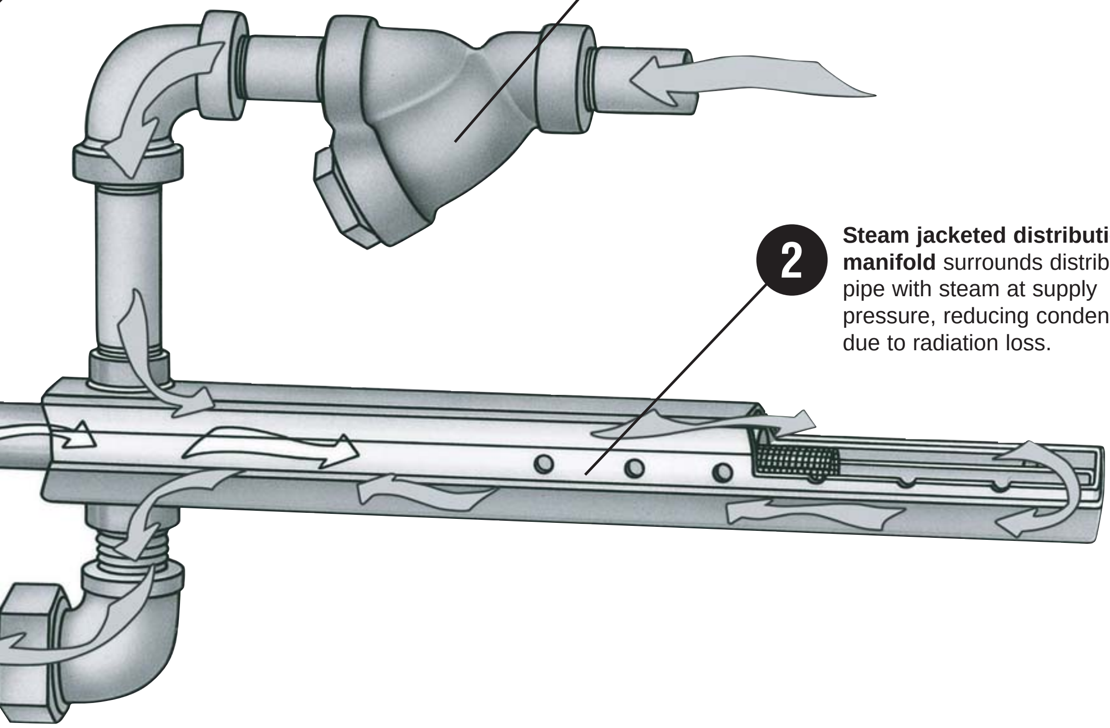

3 **Strong cast iron separator** dampens noise and effects of vibration. Its thick walls mean better heat retention and therefore less condensation.

5 **Large drain leg** collects condensate and discharges through the drain trap.

Armstrong's four-step conditioning process

- **Straining.** The first step in steam conditioning, straining removes most of the steam's dirt and scale particles.

- **Separating.** In the cast iron separating chamber, a cupped baffle reverses the flow, forcing the steam back on itself. The outer walls of the chamber form another cup, and the same thing happens again. These two 180° turns reduce the velocity and separate the condensate from the vapor. The center baffle, positioned directly over the large drain connection, knocks down and further guides condensate out the drain.

- **Drying.** Steam entering the dying chamber is at supply temperature and essentially atmospheric pressure, so there is no condensation. Any remaining mist is re-evaporated before it leaves the humidifier.

- **Silencing.** The drying chamber is filled with a stainless steel silencing material which absorbs almost completely the noise of escaping steam as it is generated at the control valve.

Precise control and uniform distribution

Humidifier control must provide immediate response and precise modulation in order to accurately maintain the required relative humidity. Faulty control can lead to overloading the ducts with moisture and the creation of wet spots or failure to provide the required humidity level.

Two design factors affect the accuracy of humidifier control – the metering valve and the actuator that positions the valve.

Precise flow control can be achieved with a valve designed expressly for the purpose of adding steam to air. All Armstrong modulating humidifiers employ unique parabolic plug type valves. See Figure 52-1.

Armstrong uses an exclusive modified plug for the control valve to accomplish this. The modification of true linear characteristics provides more precise control when capacity requirements are very low and the valve is just cracked off the seat. Notice in Chart 52-1 that at point A on the curve more than half the valve stroke is devoted to 40% of the unit's capacity. At point B, one-quarter of the stroke is devoted to only 10% of capacity. At point C, 10% of the stroke covers less than 5% of the unit's capacity.

How low can the unit control? Table 52-1 tabulates this function, called rangeability. Rangeability is the ratio between the maximum controllable flow and the minimum controllable flow of steam through the valve. The higher the rangeability of a valve, the more accurately it can control steam flow at low outputs.

To calculate this minimum flow, simply multiply Continuous Discharge Capacity by the percentage shown in Table 52-1. **For example**, a $^{9}/_{32}$" orifice at 15 psi can discharge 75 lb/hr. The lowest output that can be controlled is 2.5% of 75 or $1^{7}/_{8}$ lb/hr.

Humidifier operators

Table 52-1. Steam Humidifier Valve Rangeabilities

	Valve	Rangeability	
Humidifier Models	Equivalent Diameter (IN)	Ratio of Flow Max.:Min.	Minimum Flow % of Maximum
Model No. 94	1-1/2	63:1	1.6
	1-1/4	69:1	1.4
	1-1/8	61:1	1.6
	1	53:1	1.9
	7/8	44:1	2.3
	3/4	33:1	3.0
	5/8	25:1	4.0
Model No. 93	3/4	118:1	0.8
	5/8	123:1	0.8
	9/16	105:1	0.9
	1/2	97:1	1.0
	15/32	85:1	1.2
	7/16	75:1	1.3
	13/32	64:1	1.6
Model No. 92	1/2	97:1	1.0
	7/16	75:1	1.3
Model No. 90, 91 or 92	3/8	70:1	1.4
	11/32	59:1	1.7
	5/16	49:1	2.0
	9/32	40:1	2.5
	1/4	31:1	3.2
	7/32	24:1	4.2
	3/16	18:1	5.6
	5/32	59:1	1.7
	1/8	37:1	2.7
Model No. 90 or 91	7/64	28:1	3.5
	3/32	21:1	4.8
	5/64	15:1	6.9
	1/16	10:1	10.0

Figure 52-1. Parabolic Plug Metering Valve
Parabolic plug valve configuration permits accurate modulation of flow over the complete stroke of the valve.

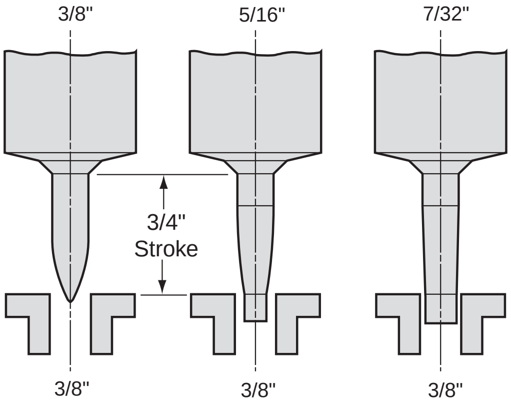

Chart 52-1.
Modified linear characteristic curve for valves used under modulating control. The modification of true linear characteristics provides more precise control when capacity requirements are very low and the valve is just cracked off the seat.

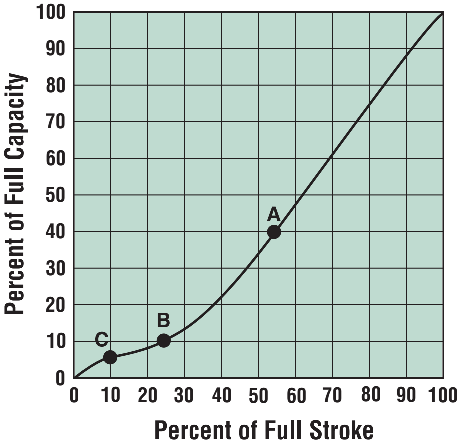

The operator for the valve is equally important to humidifier control, and several types are available to provide compatibility with the system in which they are installed. The operator must be able to position the valve in very nearly identical relationship to the seat on both opening and closing strokes. This is essential in order to provide consistent, accurate metering of steam discharged by the humidifier.

By their design, electric motor modulating actuators provide true linear positioning characteristics on both opening and closing cycles. Pneumatic operators may or may not be able to provide the precise positioning and holding characteristics essential to accurate control. Rolling diaphragm type pneumatic operators are recommended, providing they meet the following criteria:

1. Large diaphragm area – 12 square inches or more – to provide ample lifting force. This permits the use of a spring heavy enough to stabilize both the hysteresis effect and the flow velocity effect on the positioning of the valve stem versus air pressure to the operator.
2. Diaphragm material that is highly resistant to wear or weakening from continuous cycling and high temperatures.
3. Operator stroke long enough, in conjunction with valve plug and seat design, to provide high rangeability ratios.
4. Easy serviceability.

Table 53-1. Operator Spring Ranges for Pneumatically Controlled Humidifiers

Armstrong C-1801		Honeywell MP953D	
Operating Range	Adjustable Start Points	Operating Range	Non-adjustable Start Points
5 lbs.	3 psig minimum	4 lbs.	3 psig
*10 lbs.	3 psig minimum	5 lbs.	8 psig
		*7 lbs.	4 psig

*Standard spring - furnished when no spring range is specified.

All modulating operators, whether electric or pneumatic, should incorporate a spring return. This is necessary to ensure closing of the valve if there is an interruption of power or control air to the unit.

For industrial in-plant operation and for certain very limited duct applications, a solenoid operator may be used to provide simple on/off operation. This type of operator should not be specified for duct applications without a detailed analysis of the system.

Chart 53-2.
Desirable operating characteristic for pneumatic actuators. Position of valve is very nearly identical on both opening and closing strokes at any given air pressure to the actuator.

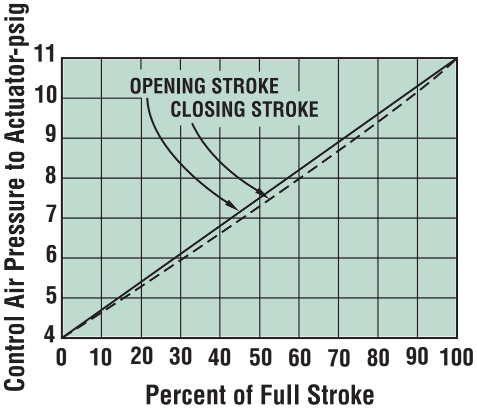

Temperature switches are recommended.

Temperature switches prevent humidifier operation until start-up condensate is drained and the entire unit is up to steam temperature, thus eliminating the possibility of spitting on cold start-up.

Either pneumatic or electric temperature switches are recommended in any system where the steam supply to the manifold jacket and humidifier body may be interrupted or turned off, such as summer cycles. Cold piping downstream of the on/off valves can generate spitting.

Precise control and uniform distribution, continued…

Operator Types

Armstrong C-1801 pneumatic operator for humidifiers under modulating control. Adjustable start points and various air pressure ranges. (See Table 53-1, Page 53.)

Standard Honeywell MP953D pneumatic operator for humidifiers under modulating control. Operating spring ranges and start points are shown in Table 53-1, Page 53. Operational start point adjustment is available in the form of a pilot positioner where required.

Standard electric operator for humidifiers under modulating electrical control. Choice of Honeywell M9182A operator (shown above 24V 60Hz), or Belimo AF24SR (24V 60 Hz), or Belimo NVF24 (shown below, 24V 60Hz standard). Transformers for other voltages available for all electric operators.

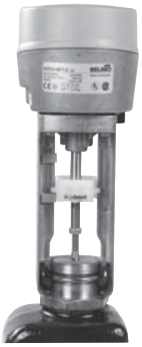

Standard ASCO electric solenoid operator for humidifiers under on-off control. **Caution:** On-off operation of humidifiers in air handling systems is advisable only for very limited, specialized applications. Consult your Armstrong Representative.

Humidifier operators in stock

1. Pneumatic Modulating

Armstrong	C-1801
Honeywell	M953D and F
Invensys	MK4421 and MK4411

2. Electric Modulating

Honeywell	M9182A
Belimo	AF24SR NVF24

3. Solenoid

Asco	Class H Coil

Additional Humidifier operators that have been installed on Armstrong humidifiers*

1. Pneumatic Modulating

Invensys	MK-4411, 4421
Johnson	PA 20/150
Sauter	AV42P10 with XSP31 positioner

Note: Please consult Armstrong for choice of pneumatic actuator on 94 size humidifier when steam pressure is above 30 psig.

2. Electric Modulating

Invensys	MP-361, MP-461
Belimo	AF24SR, NVF24
Landis & Gyr and Staefa	SKD62

Note: Any operator with a reverse acting (lift to open) 3/4” stroke and spring return can usually be adapted. Consult factory for details.

*Request Armstrong Application Guideline APP-505 for details on control signal and power requirements.

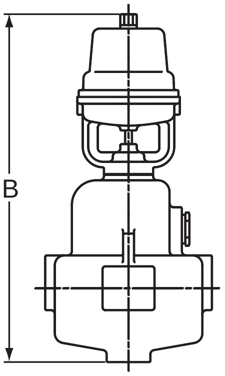

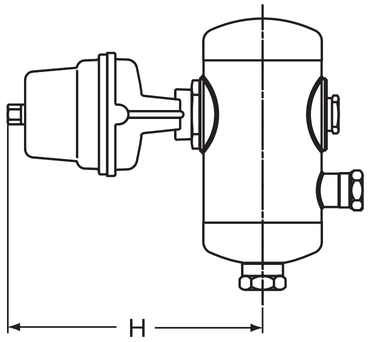

Table 55-1. Dimensions with Operators Installed

	Pneumatic Modulating			Electric Modulating			Electric On-Off
Mode of Control	**Armstrong C-1801**	**Honeywell MP953D**	**Invensys MK4411 & MK4421**	**Honeywell M9182A**	**Belimo AF24SR**	**Belimo NVF24-MFT-US-E**	**ASCO**
"B" - 90 Size	11-7/8"	10-3/8"	14-7/8"	14-7/8"	18-1/2"	15"	7"
91 Size	16"	14-1/2"	19"	18-7/8"	22-11/16"	18-15/16"	10-7/8"
92 Size	16"	14-1/2"	19"	18-7/8"	22-11/16"	18-15/16"	10-7/8"
93 Size	19-1/2"	17-7/8"	22-3/16"	22-1/8"	26-3/16"	22-1/4"	14-1/2"
94 Size	—	24-1/2"	—	27-7/8"	31-1/16"	27-7/16"	—
"H" - 1100 Size	9-3/8"	8"	12-1/2"	13"	16-1/16"	14-9/16"	4-3/8"
1200 Size	9-9/16"	8-3/16"	12-9/16"	13-3/16"	16-1/4"	14-3/4"	4-9/16"
1300 Size	10-3/4"	9-1/4"	13-3/4"	14-1/4"	17-5/16"	15-13/16"	5-5/8"
1400 Size	—	11-5/16"	15-3/4"	16-5/16"	19-3/8"	—	—
Weight of Operator	7-3/4 lbs.	6 lbs.	6-1/4 lbs.	12 lbs.	13 lbs.	4-1/4 lbs.	3/4 lbs.

Central station or booster humidifiers in air handling systems

(physical data, dimensions and capacities)

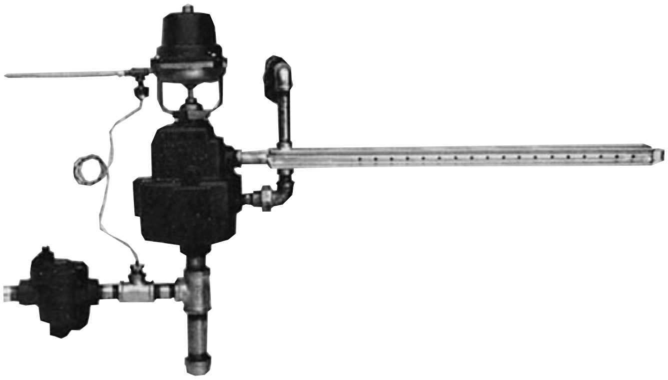

Figure 56-1.

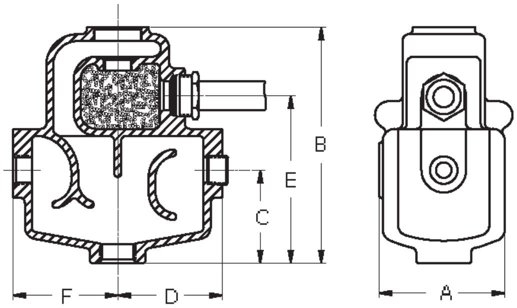

Table 56-1. Physical Data

Humidifier Model Number	Dimensions, Inches						Connection Sizes			Drain Trap Model	Weight, lbs. † (less operator and manifold)
	A	B*	C	D	E	F	Inlet	Drain	Trap		
**90	4	4-5/8	1-7/8	2-3/8	2-7/16	2-13/16	1/2" NPT	1" NPT	1/2" NPT	800	13-1/2
91	4-9/16	8-9/16	3-3/8	3-1/16	6-1/16	3-13/16	1/2" NPT	1" NPT	3/4" NPT	800	24
92	5-9/16	8-9/16	3-3/8	3-13/16	6-1/16	3-13/16	3/4" NPT	1" NPT	3/4" NPT	800	30
93	6-3/4	11-7/8	4-5/8	4-3/4	9	4-3/4	1-1/4" NPT	1-1/4" NPT	3/4" NPT	811	52
94	10-7/8	17-1/8	6-7/8	8	12-5/8	8	2" NPT	2" NPT	3/4" NPT	812	145

†Weight includes drain trap, strainer, and fittings. *Add height and weight of operator for overall data. See Table 56-1, Page 56.
**For more information, see Page 68.
For Physical Data on Series 1000 Stainless Steel Humidifiers, see Page 71.

Table 56-2. List of Materials

Steam Chamber	Cast Iron	Manifold Coupler	Brass
Bonnet Assembly	Brass	Nut	Brass
Valve & Stem	18-8 Stainless Steel	Strainer	Cast Iron
Valve Seat	18-8 Stainless Steel	Tubing (Model 90 Only)	Copper
Manifold	304 Stainless Steel	Compression Fittings (Model 90 Only)	Brass
Manifold Fittings	Brass	Steam Trap	Cast Iron

Armstrong Conditioned-Steam Humidifiers for air handling systems are manufactured to meet the needs of central station humidification or booster humidification. Operation and control may be pneumatic or electric. See Page 54.

Standard Package

All Armstrong Conditioned-Steam Humidifiers are supplied in standard "packages" which include the following:

Pneumatically Controlled (AM) Models:

1. Humidifier with integral operator.
2. Distribution manifold of length specified.
3. "Y" type strainer.
4. Armstrong inverted bucket trap.

Electric Motor Controlled (EM) Models:

1. Humidifier with integral operator.
2. Distribution manifold specified.
3. "Y" type strainer.
4. Armstrong inverted bucket trap.

Recommended Option

A pneumatic or an electric temperature switch is offered as an optional extra and is recommended in any system where the steam supply to the manifold jacket and humidifier body may be interrupted or turned off.

Table 57-1. Sizes 90, 91 and 1100, Continuous Discharge Capacities in lbs. of Steam Per Hour

Orifice Size (In)	Steam Pressure, psig																						
	2	3	4	5	6	7	8	9	10	11	12	13	14	15	20	25	30	35	40	45	50	55	60
1/16	1.3	1.7	2.0	2.3	2.6	2.8	3.0	3.2	3.4	3.6	3.8	4.0	4.2	4.4	5.6	6.5	7.7	8.4	9.2	10.0	11.0	11.8	12.3
5/64	2.1	2.7	3.2	3.7	4.1	4.4	4.8	5.1	5.4	5.7	6.0	6.2	6.4	6.7	8.4	10.6	11.2	12.4	13.0	14.8	16.0	17.8	19.0
3/32	3.0	3.9	4.6	5.2	5.8	6.3	6.8	7.3	7.8	8.2	8.6	9.0	9.3	9.6	11.9	13.4	14.3	17.2	19.2	21.2	22.8	23.7	24.4
7/64	4	5	6	7	8	8	9	10	10	11	11	12	12	13	16	18	19	21	24	26	28	31	33
1/8	5	7	8	9	10	11	12	13	14	14	15	16	17	18	23	25	28	30	33	35	37	40	44
5/32	8	10	12	14	16	17	19	20	21	22	23	25	26	27	31	36	40	44	48	52	56	60	65
3/16	12	15	18	21	23	26	27	29	31	32	35	36	37	40	47	52	59	65	70	77	83	88	93
7/32	16	21	25	29	32	35	37	40	42	44	47	49	51	53	62	70	84	90	98	103	113	126	135
1/4	22	28	33	38	42	46	49	53	55	59	62	64	67	69	82	91	102	115	125	135	150	160	170
9/32	26	32	38	43	47	50	54	58	61	64	67	70	72	75	89	102	115	125	140	150	160	175	185
5/16	32	38	44	50	55	60	64	68	73	77	82	85	88	92	105	123	134	148	167	198	216	234	251
11/32	36	43	50	55	66	72	76	81	85	90	94	97	103	108	127	147	172	190	209	230	248	267	277
3/8	42	50	56	65	70	76	82	93	97	105	110	115	121	126	150	171	191	212	233	255	272	303	316

Note: Capacities below darkened line pertain to models 91 and 1100 only. Also see Table 68-1, Page 68, for size 90 capacities.

Table 57-2. Sizes 92 and 1200, Continuous Discharge Capacities in lbs. of Steam Per Hour

Orifice Size (In)	Steam Pressure, psig																						
	2	3	4	5	6	7	8	9	10	11	12	13	14	15	20	25	30	35	40	45	50	55	60
1/8	5	7	8	9	10	11	12	13	15	16	17	18	19	20	23	25	28	31	33	36	38	41	44
5/32	8	10	12	14	16	17	19	20	21	22	23	25	26	27	31	36	40	44	48	52	56	60	65
3/16	12	15	18	21	23	26	27	29	31	32	35	36	37	40	47	52	59	65	70	77	83	88	93
7/32	16	21	25	29	32	35	37	40	42	44	47	49	51	53	62	70	84	90	98	103	113	126	135
1/4	22	28	33	38	42	46	49	53	55	59	62	64	67	69	82	91	102	115	125	135	150	160	170
9/32	27	35	42	48	53	58	63	67	71	75	79	81	85	88	103	117	129	140	159	177	190	199	213
5/16	33	43	51	59	65	71	77	82	87	92	97	100	104	108	127	144	159	172	197	212	228	243	261
11/32	40	52	62	70	78	84	91	97	102	109	114	119	124	129	152	172	192	206	236	252	270	297	313
3/8	53	59	65	78	84	92	99	104	115	119	123	128	133	138	162	183	205	226	246	269	290	314	334
7/16	74	84	90	99	108	117	123	131	136	143	150	158	164	170	197	224	250	277	316	346	370	400	423
1/2	88	95	100	105	112	121	133	142	150	159	166	173	182	194	230	268	300	334	367	399	428	462	486

Armstrong®

Humidifiers in air handling systems, continued…

(physical data, dimensions and capacities)

Table 58-1. Sizes 93 and 1300, Continuous Discharge Capacities in lbs. of Steam Per Hour

Capacities when Steam Supply is Through the Manifold. See Figure 57-1, Page 57.

Orifice Size (In)	Steam Pressure, psig																					
	2	3	4	5	6	7	8	9	10	11	12	13	14	15	20	25	30	35	40	45	50	55	60
13/32	70	84	100	110	121	132	139	148	153	160	169	173	180	185	212	246	270	297	330	356	384	413	441
7/16	77	95	108	125	129	138	146	155	169	176	189	196	204	213	246	286	312	336	363	401	432	464	497
15/32	83	122	130	145	150	157	167	180	193	202	211	225	230	238	282	319	356	385	416	447	480	517	546
1/2	99	128	145	160	172	185	198	202	217	228	242	253	264	272	321	364	407	435	460	500	540	581	621
9/16	103	137	159	185	196	208	225	238	258	266	271	283	291	310	360	408	456	515	562	614	661	719	753
5/8	117	147	175	202	213	234	252	274	289	296	317	338	347	369	428	488	547	607	664	726	785	847	900
3/4	127	174	203	232	255	287	300	338	361	374	382	409	436	459	548	637	745	848	924	996	1082	1179	1270

Table 58-2. Sizes 93 and 1300, Continuous Discharge Capacities in lbs. of Steam Per Hour

Capacities when Steam Supply is Direct to Separator. (Manifold Trapped Separately). See Figure 59-2, Page 59.

Orifice Size (In)	Steam Pressure, psig																					
	2	3	4	5	6	7	8	9	10	11	12	13	14	15	20	25	30	35	40	45	50	55	60
13/32	70	84	100	110	121	132	139	148	153	160	169	173	180	185	212	246	270	297	330	356	384	413	441
7/16	77	95	108	125	129	138	146	155	169	176	189	196	204	213	246	286	312	336	363	401	432	464	497
15/32	83	122	130	145	150	157	167	180	193	202	211	225	230	238	282	319	356	385	416	447	480	517	546
1/2	99	128	145	160	172	185	198	202	217	228	242	253	264	272	321	364	407	435	460	500	540	581	621
9/16	103	137	159	185	196	208	225	238	258	266	271	283	291	310	360	408	456	515	562	614	661	719	753
5/8	125	160	183	209	225	248	263	285	307	314	336	358	372	381	460	512	575	641	696	757	831	924	977
3/4	136	187	220	263	270	300	336	376	409	430	464	495	510	524	635	740	827	931	1017	1103	1195	1281	1366

Table 58-3. Sizes 94 and 1400, Continuous Discharge Capacities in lbs. of Steam Per Hour

Capacities when Steam Supply is Through the Manifold. See Figure 59-1, Page 59.

Orifice Size (In)	Steam Pressure, psig															
	2	3	4	5	6	7	8	9	10	11	12	13	14	15	20	25	30
5/8	137	167	190	213	225	251	266	289	312	327	350	372	388	414	478	541	606
3/4	185	227	258	290	309	340	361	391	425	443	474	505	525	556	684	772	859
7/8	243	297	338	378	405	446	473	513	553	581	621	662	689	758	873	996	1109
1	278	343	390	437	468	515	546	593	639	671	718	764	796	850	991	1134	1268
1-1/8	320	396	450	508	540	594	630	684	748	774	828	882	918	931	1117	1304	1469
1-1/4	344	418	475	553	570	627	665	722	795	817	874	931	969	988	1182	1391	1567
1-1/2	390	490	558	621	669	736	781	847	919	959	1026	1093	1137	1153	1396	1607	1816

Table 58-4. Sizes 94 and 1400, Continuous Discharge Capacities in lbs. of Steam Per Hour

Capacities when Steam Supply is Direct to Separator. (Manifold Trapped Separately). See Figure 59-2, 59-3, Page 59.

Orifice Size (In)	Steam Pressure, psig																					
	2	3	4	5	6	7	8	9	10	11	12	13	14	15	20	25	30	35	40	45	50	55	60
5/8	137	167	190	213	225	251	266	289	312	327	350	372	388	414	478	541	606	668	733	798	881	954	1017
3/4	198	242	275	308	330	363	385	418	451	473	506	539	561	607	707	790	890	982	1073	1175	1264	1357	1446
7/8	252	308	350	392	420	462	490	532	574	602	644	686	714	790	908	1017	1147	1270	1399	1537	1650	1781	1867
1	299	374	425	489	510	561	595	646	718	731	782	833	867	938	1075	1233	1393	1528	1688	1835	1978	2118	2289
1-1/8	370	462	525	588	630	693	735	798	834	903	966	1029	1071	1114	1334	1539	1695	1895	2105	2262	2468	2644	2822
1-1/4	413	517	588	661	705	776	823	893	960	1011	1081	1152	1199	1214	1487	1729	1946	2158	2386	2607	2800	3053	3205
1-1/2	540	660	750	840	900	990	1050	1140	1206	1290	1380	1470	1530	1541	1858	2118	2416	2648	2925	3193	3600	3870	4020

Note: Steam Pressure used to jacket 94 size manifold must not exceed 30 psig. Steam pressure can go to 60 psig if multiple 93 size manifolds are used. (See Figure 59-3, Page 59).

Metric Conversion: lb/hr x .4536 = kg/hr; psig x 6.89 = kPa

Note: Please consult Armstrong for choice of pneumatic actuator on 94 size humidifier when steam pressure is above 30 psig.

Steam Supply Methods

Figure 59-1. Steam supply through manifold

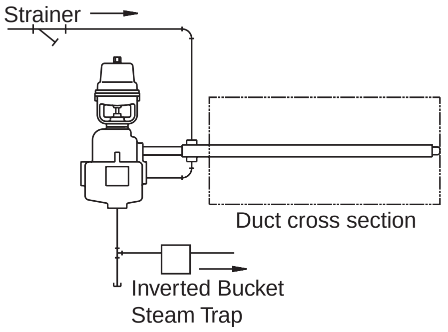

Figure 59-2. Steam supply direct to separator (Manifold trapped separately)

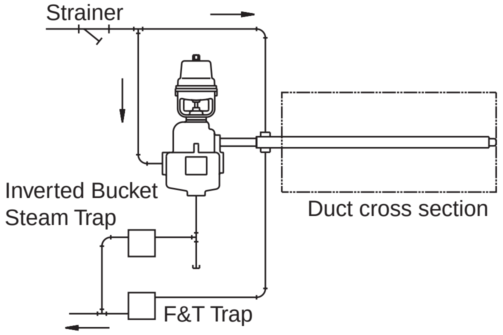

Figure 59-3. Steam supply direct to separator (Manifold trapped separately)

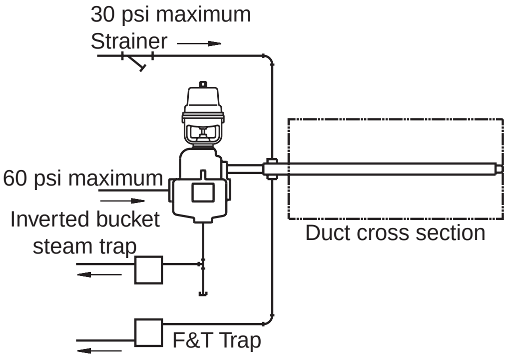

*30 psi maximum for size 94 and 1400 manifolds.

How to Order

1. Mode of control pneumatic modulating – AM, electric modulating – EM

For industrial in-plant operation and for certain very limited duct applications, a solenoid actuator may be used to provide simple on-off operation. This type of actuator should not be specified for duct applications without a detailed analysis of the system – DSA.

2. Size of humidifier for duct installation – 90, 91, 92, 93, 94
3. Manifold length from Table 61-2, Page 61.
4. Specify steam pressure and capacity required in accordance with Tables on Pages 57 and 58.
5. For electrically operated models, state electrical characteristics (control signal, and power supply voltage).

Suggested Specification

Steam Humidifiers for pneumatic or electric modulating control: Humidifier shall be the steam separator type providing full separation ahead of an integral steam jacketed control valve which discharges through an internal steam jacketed drying chamber, a silencing chamber and a steam jacketed distribution manifold.

A. Humidifier shall receive steam at supply pressure and discharge at atmospheric pressure. It shall be furnished with inlet strainer and external inverted bucket steam trap.

B. Separating chamber shall be of a volume and design that will disengage and remove all water droplets and all particulate matter larger than 3 microns when humidifier is operating at maximum capacity.

C. The stainless steel metering valve shall be integral within the body of the humidifier, and shall be jacketed by steam at supply pressure and temperature to prevent condensation.

D. The stainless steel metering valve shall be a parabolic plug with a $^{31}/_{44}$” stroke, providing the high rangeabilities required to achieve full and accurate modulation of steam flow over the entire stroke of the valve.

E. The internal drying chamber shall receive steam at essentially atmospheric pressure and be jacketed by steam at supply pressure and utilize a stainless steel silencing medium.

F. The distribution manifold shall provide uniform distribution over its entire length and be jacketed by steam to assure that vapor discharged is free of water droplets.

G. Humidifier shall be equipped with an interlocked temperature switch to prevent the humidifier from operating before start-up condensate is drained.

Installation of Armstrong duct-type humidifiers for air handling systems

Armstrong Humidifiers for air handling systems may be installed in fan housings, plenums or ducts.

Normal manifold installation is with the manifold extending horizontally. When required, the manifold may extend vertically upward. It must not extend vertically downward.

Horizontal manifolds should be perfectly level with the discharge holes pointed upstream against the air flow. **Note:** If manifold is insulated, discharge holes must point downstream to prevent condensation on metal insulation cover. Manifolds over 1 foot in length should be supported.

Steam supply and condensate drain piping should be made in accordance with good piping practice. Trap discharge must be connected to a return line with pressure well below supply pressure to the humidifier. Please see Basic Application Principles in the Humidification Engineering section beginning on Page 24 of this catalog.

Warning: Steam humidifiers (or other products) should be installed in locations that allow routine inspection and accessibility for maintenance operations. Armstrong recommends that steam humidifiers not be placed in locations where unusual instances of malfunction of the humidifiers or the systems might cause damage to non-repairable, unreplaceable, or priceless property.

Primary Methods of Installation

Figure 60-1. Method Number 1

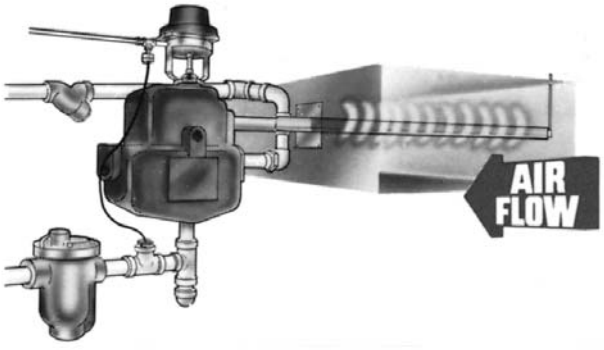

Figure 60-2. Method Number 2

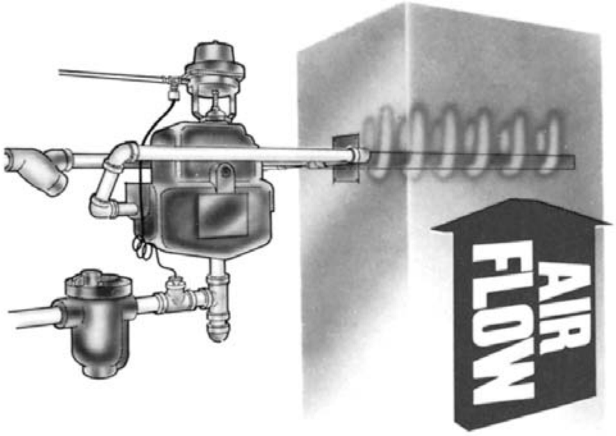

Figure 60-3. Method Number 3

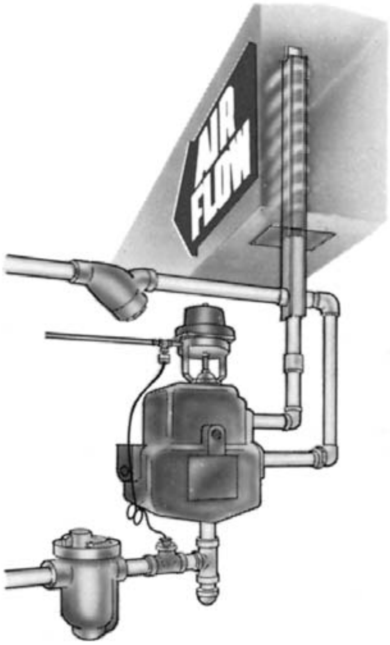

Figure 61-1. Steam Distribution Manifold Data

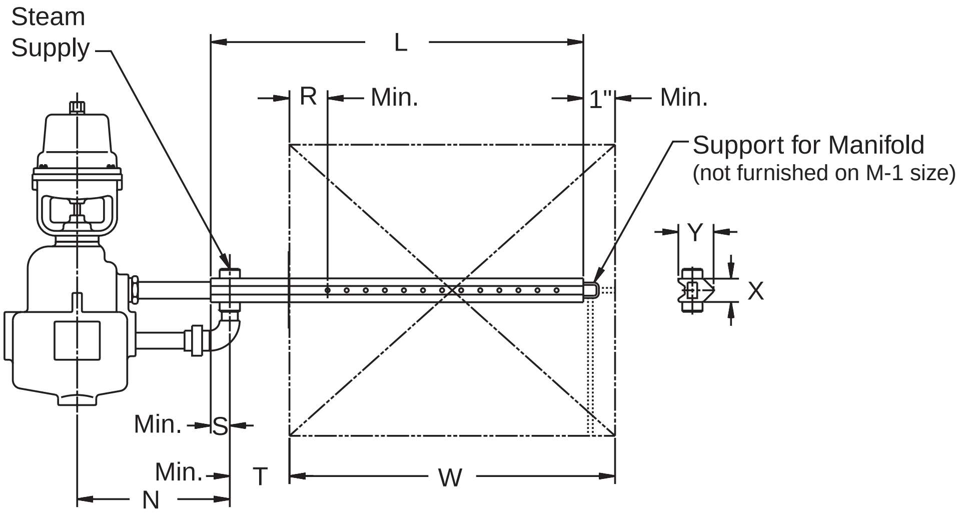

Table 61-1. Cross-Section Dimensions							
Model No.	**"N"**	**"R"**	**"S"**	**"T"**	**"X"**	**"Y"**	**"Z"**	**Steam Supply**
91 and 1100	5-11/16"	2"	1"	1"	1-1/4"	1-7/8"	1-13/16	1/2" NPT
92 and 1200	8-9/16"	2"	1"	1"	1-3/4"	2-5/8"	2-1/16	3/4" NPT
93 and 1300	9-1/16"	2"	1-5/8"	1-5/8"	2-1/8"	3-1/8"	—	1-1/4" NPT
94 and 1400	13-1/2"	2"	1-5/8"	1-5/8"	3-1/4"	4-1/4"	—	2" NPT

Note: For Model 90, see Page 65.

Table 61-2. Manifold Lengths and Duct Widths with which they may be used

Manifold Model No.		M-1	M-1.5	M-2	M-3	M-4	M-5	M-6	M-7	M-8	M-9	M-10	M-11	M-12
L (Length)		12"	18"	24"	36"	48"	60"	72"	84"	96"	108"	120"	132"	144"
W-Duct Width	(Min.)	8"	15"	21"	31"	43"	53"	65"	77"	89"	101"	113"	125"	137"
	(Max.)	14"	20"	30"	42"	52"	64"	76"	88"	100"	112"	124"	136"	148"
Shipping Weight, lbs. Approx.	91 and 1100 Size	3	4	5	6	8	10	12	14	15	17	19	21	23
	92 and 1200 Sizes	4	5	6	9	11	13	16	18	21	22	25	28	30
	93 and 1300 Sizes	6	8	10	13	17	21	24	29	32	37	41	43	46
	94 and 1400 Sizes	Consult Factory				24	30	34	40	45	51	55	60	64

Note: Insulated manifolds are available. Consult factory.
For Model 90 manifold lengths, see Pages 63 and 71.

Table 61-3. Recommended Number of Manifolds for Various Duct Heights

Duct height at humidifier location	No. of manifolds to be installed for one or more humidifiers
37" to 58'	2
59" to 80"	3
81" to 100"	4
101" & over	5

Note: If you have specific vapor trail considerations, please contact the Armstrong HVAC Application Engineering Department.

Table 61-4. Multiple Manifold Pipe Sizes and Adapter Numbers

Humidifier Size	Manifold Pipe Adapter No.	Pipe Connection Size
91	A-4967-B	1/2"
92	A-4967	3/4"
93	A-4967-L	1"*
94	A-5002	2"
1100	A-4967-S	1/2"
1200	A-4967-P	3/4"
1300	A-4967-R	1"*
1400	A-5002-C	2"

*Manifold tube is 1". Jacket connections are 1-1/4".

All dimensions and weights are approximate. Use certified print for exact dimensions. Design and materials are subject to change without notice.

How electrically operated units work.

After passing through the Armstrong in-line strainer, steam enters the cast iron steam separating chamber. The use of cast iron as a separator is probably the single most important feature in the Armstrong humidifier design.

The preferred material of strength and durability, cast iron gives Series 9000 humidifiers flexibility in design without fabrication. In addition, castings mean better heat retention because of thicker walls. Which in turn means a lower rate of condensation.

Entering the main separating chamber, steam encounters a cupped baffle which reverses its flow and turns it back on itself. The outer walls of the casting form another cup, and the same thing happens again. These two 180° turns help condition the steam, reducing its volume and separating the condensate from the vapor. Condensate from supply and radiation and most of the particulates in the steam not removed by the strainer collect in the large drain leg and are discharged through the inverted bucket drain trap.

Steam from the separating chamber flows around and through the solenoid valve, which is actuated by a demand signal from the humidistat. (Solenoids can be exchanged for electric or pneumatic control if desired by choosing an operator and bonnet assembly.)

Next the steam flows into the drying chamber, which is jacketed by the separating chamber. The drying chamber is filled with a stainless steel silencing material, which almost completely absorbs the noise of escaping steam. Dispersion is through a jet nozzle or by a fan.

How air-operated units work.

Air-operated units operate in the same manner as electric units except that they utilize a pneumatic humidistat as humidity controller in the space and an air operator to open and close the steam valve.

Explosion hazard humidification.

Sizing air-operated humidifiers for areas where an explosion hazard exists is done exactly as for other requirements except that they should be sized for the most severe conditions of makeup air, RH required and minimum steam pressure.

Table 62-1. Location of Unit Humidifiers for Direct Discharge into Atmosphere

Method of Steam Dispersion	Maximum Discharge Capacities in lbs. of Steam per Hour	Minimum Ceiling	Ceiling Clearance
Electric Fan FSA, AMEF Models	30	8'	2'
	80	10'	3'
	200	14'	6'
	300	16'	8'
Air Fan AMAF Models	30	10'	3'
	80	12'	4'
	200	16'	8'
	300	20'	8'
Jet VSA, AM Models	30	10'	4'
	80	12'	6'
	200	20'	10'
	300	20'	10'

Figure 62-1. How Armstrong Conditioned Steam Humidifiers Operate for Area Humidification

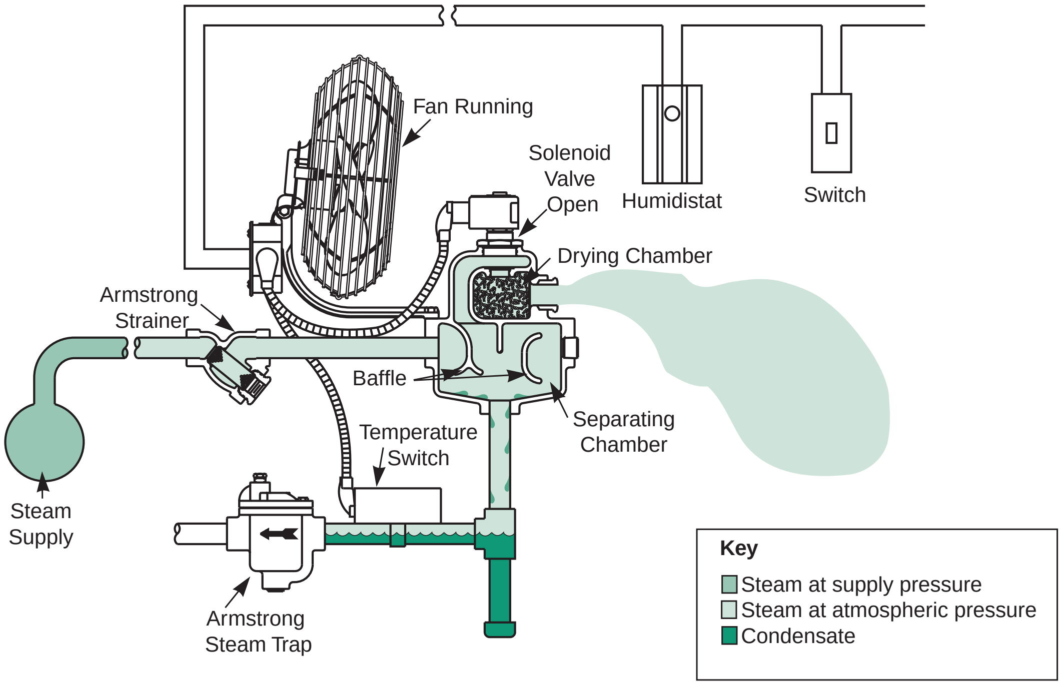

SteamStik™ 90/91 Aluminum Manifolds

Armstrong’s SteamStik™ aluminum steam jacketed distribution manifold is a more affordable option to the standard Series 90/91 size stainless steel distribution manifolds.

SteamStik™ aluminum manifolds are interchangeable with the stainless steel style manifolds capacity wise and up to a maximum pressure of 15 psig. They are available in one to twelve foot lengths.

Features/Benefits:

- Lighter weight
- Easy to install by one person
- Improved steam distribution
- No pocketing of condensate in jacketing
- Lower DBA
- Faster heat transfer
- Same duct heat rise as the ss manifold
- Lower shipping costs

Note: Maximum operating pressure is 15 psig. Steam system should have a neutral Ph of 7.2 to 7.6.

Model 90 Humidifier With SteamStik™ Aluminum Manifolds

Figure 63-1

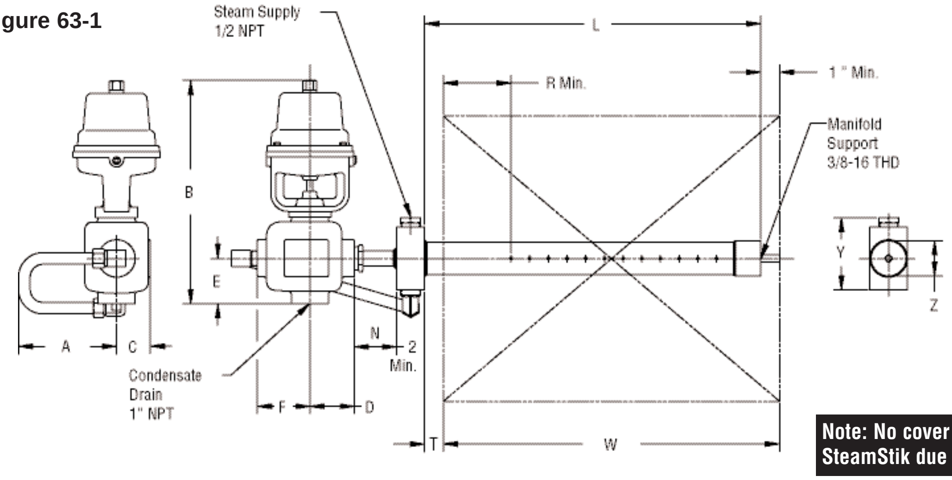

Note: No cover plate is required with SteamStik due to its round shape

Table 63-1. Physical Data

Dimensions, Inches					
A	**Armstrong C-1801 B**	**C**	**D**	**E**	**F**
5-1/4	11-7/8	1-7/8	2-3/8	2-7/16	2-13/16

Table 63-2. List of Materials

Manifold	Aluminum/Plastic
Manifold Fittings 1/2" NPT	Brass
Manifold Inlet Reducer Bushing 3/4" MNPT to 1/2" NPT	Brass

Note: An additional 3/4” x 1/2” reducer bushing is supplied for the manifold jacket outlet for multiple manifold hook-ups.

Table 63-3. Manifold Cross-Section Dimensions

N	R	T	Y	Z	Steam Supply	Condensate Drain
2	2	1	3-7/8	1-7/8	1/2 NPT	1 NPT

Table 63-4. Manifold Lengths and Duct Widths with which they may be used

Vertical Manifold Model No.		**MAV-1**	**MAV-1.5**	**MAV-2**	**MAV-3**	**MAV-4**	**MAV-5**	**MAV-6**	**MAV-7**	**MAV-8**	**MAV-9**	**MAV-10**	**MAV-11**	**MAV-12**
Horizontal Manifold Model No.		**MAH-1**	**MAH-1.5**	**MAH-2**	**MAH-3**	**MAH-4**	**MAH-5**	**MAH-6**	**MAH-7**	**MAH-8**	**MAH-9**	**MAH-10**	**MAH-11**	**MAH-12**
L (Length)		12	18	24	36	48	60	72	84	96	108	120	132	144
W-Duct Width	(Min.)	8	15	21	31	43	53	65	77	89	101	113	125	137
	(Max.)	14	20	30	42	52	64	76	88	100	112	124	136	148
Shipping Weight, lbs. Approx.		2 1/2	3	4	5	6	7	8	9	10	11	12	13	14

All dimensions and weights are approximate. Use certified print for exact dimensions. Design and materials are subject to change without notice.

SteamStik™ 90/91 Aluminum Manifolds

Model 91 Humidifier with SteamStik™ Aluminum Manifolds

Figure 64-1

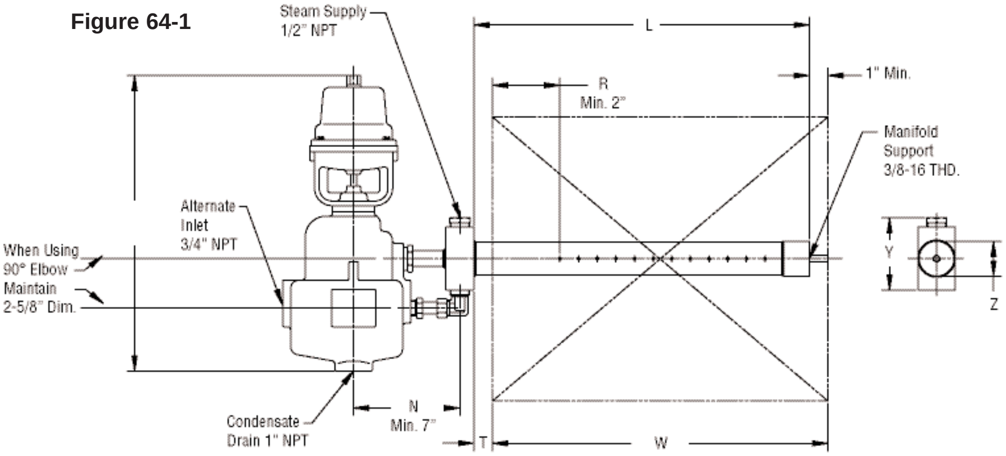

Table 64-1. Manifold Cross-Section Dimensions							
Model No.	N	R	T	Y	Z	Steam Supply	Condensate Drain
91	7	2	1	3-7/8	1-7/8	1/2 NPT	1 NPT

Table 64-2. Physical Data
Armstrong C-1801 B
16

Table 64-3. Manifold Lengths and Duct Widths with which they may be used

Manifold Model No.		MA-1	MA-1.5	MA-2	MA-3	MA-4	MA-5	MA-6	MA-7	MA-8	MA-9	MA-10	MA-11	MA-12
L (Length)		12	18	24	36	48	60	72	84	96	108	120	132	144
W-Duct Width	(Min.)	8	15	21	31	43	53	65	77	89	101	113	125	137
	(Max.)	14	20	30	42	52	64	76	88	100	112	124	136	148
Shipping Weight, lbs. Approx.	91	2 1/2	3	4	5	6	7	8	9	10	11	12	13	14

Figure 64-2. Manifold Options

The Model 90 must be specified for horizontal or vertical manifold installation. Horizontal is fairly obvious, but the vertical designation can be confusing. Vertical refers to the **direction of air flow**, not the position of the manifold. See the following sketches for clarification. If the manifold itself is to be vertical, a manifold pipe adapter (A-4967-B) should be specified, **not** one of the above designations.

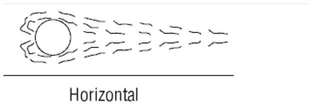
Horizontal

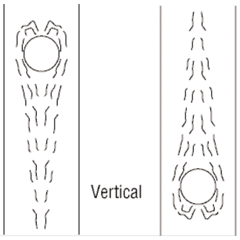
Vertical

Note: No cover plate is required with SteamStik due to its round shape

Table 64-4. Recommended Number of Manifolds for Various Duct Heights	
Duct height at humidifier location	No. of manifolds to be installed for one or more humidifiers
37 to 58	2
59 to 80	3
81 to 100	4
101 & over	5

Note: If you have specific vapor trail considerations, please consult Humidi-A-Ware Sizing and Selection software or contact the Armstrong Humidification Group.

Table 64-5. Multiple Manifold Pipe Size and Adapter Number		
Humidifier Size	Manifold Pipe Adapter No.	Pipe Connection Size
91	A-4967-B	1/2"

Note: (1) Manifold Pipe Adapter and two (2) supplied brass pipe reducers should be used with each manifold on multiple manifold installations.

All dimensions and weights are approximate. Use certified print for exact dimensions. Design and materials are subject to change without notice.

Electrically-operated “on-off” unit humidifiers

(physical data, dimensions and capacities)

With Fan.

For direct discharge into atmosphere of area humidified at steam supply pressures from 2 to 60 psi. Solenoid valve turns steam on and off. Integral fan with oilless motor provides rapid, uniform distribution of moisture.

Without Fan.

For direct discharge into atmosphere of area humidified at steam supply pressures from 2 to 60 psi. Solenoid valve turns steam on and off. Generally used in parallel with unit heaters.

Figure 65-1. FSA humidifiers

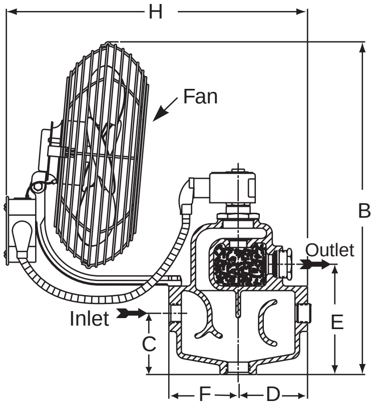

Figure 65-2. VSA humidifiers

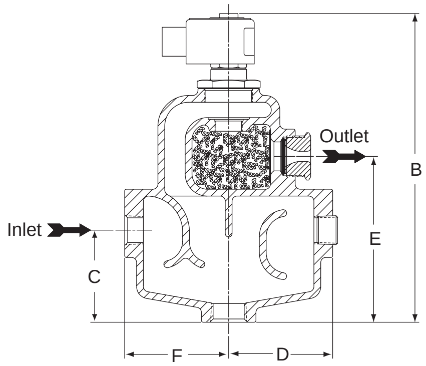

Table 65-1. Dimensions

Model No.	B	C	D	E	F	H
FSA-91	18-9/16"	3-3/8"	3-1/16"	6-1/16"	3-13/16"	15-3/4"
FSA-92	18-9/16"	3-3/8"	3-13/16"	6-1/16"	3-13/16"	15-3/4"
FSA-93	21"	4-5/8"	4-3/4"	9"	4-3/4"	18-1/4"

Table 65-2. Dimensions

Model No.	B	C	D	E	F
VSA-91	10-7/8"	3-3/8"	3-1/16"	6-1/16"	3-13/16"
VSA-92	10-7/8"	3-3/8"	3-13/16"	6-1/16"	3-13/16"
VSA-93	14-1/2"	4-5/8"	4-3/4"	9"	4-3/4"

Table 65-3. Physical Data on Armstrong Electrically Operated On-Off Humidifiers

Model Number	FSA-91	VSA-91	FSA-92	VSA-92	FSA-93	VSA-93
*Coil (watts) 120V, 50/60 Hz	10.5	10.5	10.5	10.5	10.5	10.5
*Motor (watts) 120V, 50/60 Hz	6	none	6	none	6	none
Humidistat (amps at 120V)	4.4	4.4	4.4	4.4	4.4	4.4
Shipping Weight (lbs.)	33	26	40	33	68	61
Steam Inlet & Strainer	1/2"	1/2"	3/4"	3/4"	1-1/4"	1-1/4"
Drain Connection	1"	1"	1"	1"	1-1/4"	1-1/4"
Drain Trap No. (3/4" NPT)	800	800	800	800	811	811

*Other voltages available. Consult factory.

Table 65-4. Capacities, Armstrong Electrically Operated On-Off Humidifiers

			FSA-91, VSA-91, DSA-91						FSA-92, VSA-92, DSA-92						FSA-93, VSA-93, DSA-93			
	Orifice Size		1/16"	3/32"	1/8"	5/32"	3/16"	7/32"	7/32"	1/4"	5/16"	3/8"	7/16"	1/2"	5/16"	3/8"	7/16"	1/2"
Continuous discharge capacities in lbs. of steam per hour at steam pressure indicated at the humidifier.	Steam Pressure (PSIG)	2	1.3	3.0	5	8	12	16	16	22	33	53	74	88	45	50	77	99
		4	2.0	4.6	8	12	18	25	25	33	51	65	90	100	65	85	108	145
		6	2.6	5.8	10	16	23	32	32	42	65	84	108	112	80	105	129	172
		8	3.0	6.8	12	19	27	37	37	49	77	99	123	133	88	117	146	198
		10	3.4	7.8	14	21	31	42	42	55	87	115	136	150	96	130	169	217
		12	3.8	8.6	15	23	34	47	47	62	97	123	150	166	105	142	189	—
		15	4.4	9.6	18	27	40	53	53	69	108	138	170	—	117	160	213	—
		20	5.6	11.9	23	31	47	62	62	82	127	162	—	—	136	186	246	—
		25	6.5	13.4	25	36	52	70	70	91	144	—	—	—	155	212	286	—
		30	7.7	14.3	28	40	59	78	84	102	159	—	—	—	174	237	—	—
		35	8.4	17.2	30	44	65	—	90	115	172	—	—	—	190	262	—	—
		40	9.2	19.2	33	48	70	—	98	125	—	—	—	—	208	285	—	—
		50	11.0	22.8	37	56	83	—	113	150	—	—	—	—	240	—	—	—
		60	12.3	24.4	44	65	—	—	—	—	—	—	—	—	270	—	—	—

Metric Conversion: lb/hr x .4536 = kg/hr; psig x 6.89 = kPa

All dimensions and weights are approximate. Use certified print for exact dimensions. Design and materials are subject to change without notice.

Electrically-operated “on-off” unit humidifiers, continued…

(physical data, dimensions and capacities)

Standard Package.

The complete “package” includes the following:

1. Humidifier with solenoid valve.
2. Fan and motor for FSA Models.
3. Standard open contact humidistat.
4. “Y” type strainer.
5. Armstrong inverted bucket trap.
6. Temperature switch to prevent “spitting” during warm-up.

How To Order.

Specify model number, electrical characteristics, steam pressure, and orifice size.

Suggested Specification.

Steam humidifier for electric control: Humidifier shall be of the steam separator type with full separation ahead of the control valve and with internal drying chamber and steam jacketed outlet to assure discharge of dry steam only.

A. Humidifier shall receive steam at supply pressure.

B. Separating chamber shall be drained by an inverted bucket steam trap.

C. An integral stainless steel steam jacketed solenoid valve shall control flow of steam at supply pressure to the drying chamber. The drying chamber shall be filled with stainless steel silencing material. Vapor shall be discharged from the drying chamber through the steam-jacketed outlet at atmospheric pressure to provide relative humidity at the specified level.

D. A temperature switch shall be employed to prevent humidifier from operating before cold start-up condensate is drained.

Air-operated unit humidifiers
(physical data, dimensions and capacities)

With Fan.

For direct discharge into area humidified at steam supply pressures from 2 to 60 psi. Integral air-open spring-close operator opens steam discharge valve on signal from pneumatic hygrostat. Integral air powered fan provides rapid, uniform distribution of moisture. Electric fans are also available.*

Without Fan.

For direct discharge into area humidified at steam supply pressures from 2 to 60 psi. Integral air-open spring-close operator opens steam discharge valve on signal from pneumatic hygrostat. Discharge velocity of steam is used for dispersion. Auxiliary air movement is desirable.

Figure 67-1. AMAF humidifiers with air powered fans

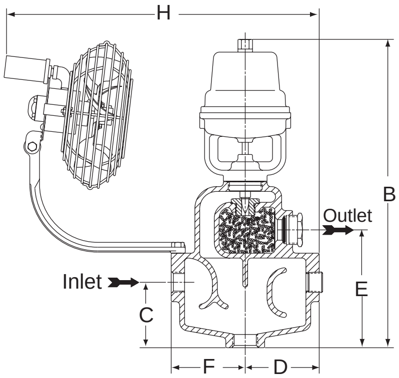

Figure 67-2. AM humidifiers

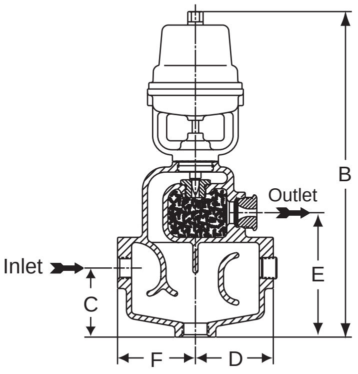

Table 67-1. Dimensions

Model No.	B	C	D	E	F	H
AMAF-91A	16"	3-3/8"	3-1/16"	6-1/16"	3-13/16"	14-9/16"
AMAF-92A	16"	3-3/8"	3-13/16"	6-1/16"	3-13/16"	15-5/16"
AMAF-93A	19-1/8"	4-5/8"	4-3/4"	9"	4-3/4"	17-3/4"

*AMEF models have same dimensions except "H."
For Sizes 91 & 92, H = 15-3/4"; for Size 93, H = 18-1/4".

Table 67-2. Dimensions

Model No.	B	C	D	E	F
AM-91A	16"	3-3/8"	3-1/16"	6-1/16"	3-13/16"
AM-92A	16"	3-3/8"	3-13/16"	6-1/16"	3-13/16"
AM-93A	19-1/8"	4-5/8"	4-3/4"	9"	4-3/4"

All AM sizes are available with electric fans identical to those furnished with FSA models. These humidifiers are designated as AMEF models.

Table 67-3. Physical Data, Armstrong Air-operated Humidifiers

Model Number	AM-91A	AMAF-91A	AM-92A	AMAF-92A	AM-93A	AMAF-93A
Air Pressure Max. (psig)	20	20	20	20	20	20
Air Required for Fan @ 20 psi	--	2 CFM	--	2 CFM	--	2 CFM
Drain Connection	1"	1"	1"	1"	1-1/4"	1-1/4"
Drain Trap No. (3/4" NPT)	800	800	800	800	811	811
Shipping Weight (lbs.)	32	38	38	44	60	66
Steam Inlet & Strainer	1/2"	1/2"	3/4"	3/4"	1-1/4"	1-1/4"

Table 67-4. Capacities, Armstrong Air-operated Humidifiers

			AM-91A, AMAF-91A						AM-92A, AMAF-92A					AM-93A, AMAF-93A			
Continuous discharge capacities in lbs. of steam per hour at steam pressure indicated at the humidifier.	Orifice Size		1/16"	3/32"	5/32"	7/32"	9/32"	3/8"	3/16"	1/4"	5/16"	3/8"	1/2"	13/32"	15/32"	9/16"	3/4"
	Steam Pressure (PSIG)	2	1.3	3.0	8	16	26	42	12	22	33	53	88	70	83	103	136
		4	2.0	4.6	12	25	38	56	18	33	51	65	100	100	130	159	220
		6	2.6	5.8	16	32	47	70	23	42	65	84	112	121	150	196	270
		8	3.0	6.8	19	37	54	—	27	49	77	99	133	139	167	215	—
		10	3.4	7.8	21	42	61	—	31	55	87	115	150	153	193	258	—
		12	3.8	8.6	23	47	67	—	35	62	97	123	166	169	211	271	—
		15	4.4	9.6	27	53	75	—	40	69	108	138	194	185	238	291	—
		20	5.6	11.9	31	62	—	—	47	82	127	162	—	212	282	—	—
		25	6.5	13.4	36	70	—	—	52	91	144	—	—	246	—	—	—
		30	7.7	14.3	40	84	—	—	59	102	159	—	—	270	—	—	—
		35	8.4	17.2	44	—	—	—	65	115	172	—	—	297	—	—	—
		40	9.2	19.2	48	—	—	—	70	125	212	—	—	—	—	—	—
		50	11.0	22.8	56	—	—	—	83	150	—	—	—	—	—	—	—
		60	12.3	24.4	65	—	—	—	93	170	—	—	—	—	—	—	—

Metric Conversion: lb/hr x .4536 = kg/hr; psig x 6.89 = kPa

All dimensions and weights are approximate. Use certified print for exact dimensions. Design and materials are subject to change without notice.

Air-operated unit humidifiers
(physical data, dimensions and capacities)

Standard Package.
The complete “package” includes the following:
1. Humidifier with integral operator.
2. Fan and motor for AMAF and AMEF models.
3. “Y” type strainer.
4. Armstrong inverted bucket steam trap.

Options.
1. Temperature switch to prevent spitting during warm-up.
2. Pneumatic humidistat.
3. Filter, air regulator and gauge.

How To Order.
Specify model number steam pressure and orifice size. Specify electrical specifications for AMEF Models.

Suggested Specification.
Steam humidifier for pneumatic control: Humidifier shall be of the cast iron steam separator type with full separation ahead of the control valve and with internal drying chamber and steam jacketed outlet to assure discharge of dry steam only.

A. Humidifier shall receive steam at supply pressure.

B. Separating chamber shall be drained by an inverted bucket steam trap.

C. An integral stainless steel steam jacketed control valve shall control flow of steam at supply pressure to the drying chamber. The drying chamber shall be filled with stainless steel silencing material. Vapor shall be discharged from the drying chamber through the steam jacketed outlet at atmospheric pressure to provide relative humidity at the specified level.

D. A temperature switch shall be employed to prevent humidifier from operating before cold start-up condensate is drained.

Conditioned-Steam Showers.

Armstrong Steam Showers are designed to create a stratum of high humidity in close proximity to a fast moving sheet or film. The objective may be to prevent accumulation of troublesome static electricity, or the shower may be used to prevent loss of moisture from the sheet or film.

If the sheet or film is hot, as it very likely may be, it tends to give up its moisture very quickly. The properly sized and installed steam shower, by creating a laminar zone of high humidity adjacent to the sheet or film, prevents this loss to maintain the desired moisture content.

In virtually all applications, however, it is essential that the steam be discharged in a “dry” state – that is, with no water droplets or liquid spray. The unique design of Armstrong Steam Showers assures this.

Separator-control units are identical in design and operation to equivalent humidifier models. The distribution manifolds have been especially modified to operate under slight pressure to meet the specific requirements of steam shower service.

Electrically controlled and pneumatically controlled models are offered in two sizes.

Figure 69-1. Armstrong Steam Shower Manifold

Standard Package.

The complete “package” includes the following:

1. Steam shower with integral operator.
2. Distribution manifold.
3. “Y” type strainer.
4. Armstrong inverted bucket steam trap.
5. Temperature switch to prevent humidifier from operating before cold startup condensate is drained. (Cannot be –incorporated on manually controlled steam showers.)

Note: Steam humidifiers (or other products) should be installed in locations that allow routine inspection and accessibility for maintenance operations. Armstrong recommends that steam humidifiers not be placed in locations where unusual instances of malfunction of the humidifiers or the systems might cause damage to non-repairable, unreplaceable, or priceless property.

Selection and Installation Notes

1. Armstrong Steam Showers are suitable for pressures up to 60 psig. Lower steam pressures (2 to 10 psig) are recommended for normal installations.
2. 91 size units are adequate for most showers up to six feet span. 92 size showers should be used for longer spans or where larger volumes of steam are desired at very low pressures. For information on even larger models, consult factory.
3. Most commonly, the dispersion manifold is installed 6” to 8” from the object of the shower – no more than 12.”
4. A pressure-reducing valve should be installed in the steam supply to control the maximum volume of steam to the shower.
5. Dimensions are the same as for corresponding humidifier models.

Table 69-1. Physical Data and Capacities, Steam Shower Bodies and Operators.

	Electrically Controlled†		Pneumatically Controlled	
Model No.	**DSA-91-SM***	**DSA-92-SM***	**AM-91-SM***	**AM-92-SM***
Shipping Wt., lbs. (less manifold)	26	33	32	38
Inlet & Strainer Size	1/2"	3/4"	1/2"	3/4"
Drain Connection Size	1"	1"	1"	1"
Drain Trap No.	800	800	800	800
Trap Connection Size	3/4"	3/4"	3/4"	3/4"
Capacities	See Table 61-4, Page 61		See Table 55-1 and 55-2, Page 55	

*Full nomenclature includes length of manifold in feet as suffix to the Model No.
†120V/60Hz is standard; other voltages available - consult factory.
Note: For larger sizes and capacities, consult factory.

Table 69-2. Manifold Lengths and Weights, Armstrong Steam Showers

Manifold Model No.		SM-1	SM-1.5	SM-2	SM-3	SM-4	SM-5	SM-6	SM-7	SM-8	SM-9	SM-10	SM-11	SM-12
Length in Inches (L)		12	18	24	36	48	60	72	84	96	108	120	132	144
Shipping Wt., lbs.	91 size	3	4	5	6	8	10	11	—	—	—	—	—	—
	92 size	6	7	8	11	13	15	17	20	23	25	27	29	31

All dimensions and weights are approximate. Use certified print for exact dimensions. Design and materials are subject to change without notice.

The Armstrong Model 90 humidifier
(physical data, dimensions and capacities)

A lightweight, low-capacity humidifier for loads up to 50 lbs. of steam per hour.

Armstrong has repackaged the humidifier technology proven so successful in its Series 9000 steam humidifiers. The result is a lightweight, low-capacity unit that meets many of your application needs: the Model 90.

The advantages of proven technology – without conventional size and weight.

Thanks to the Model 90, the efficiency of Armstrong conditioned-steam humidification now comes in a smaller, lighter package. Lighter weight and a more compact design mean simplified installation in tight quarters, easier maintenance and less weight for your piping to support.

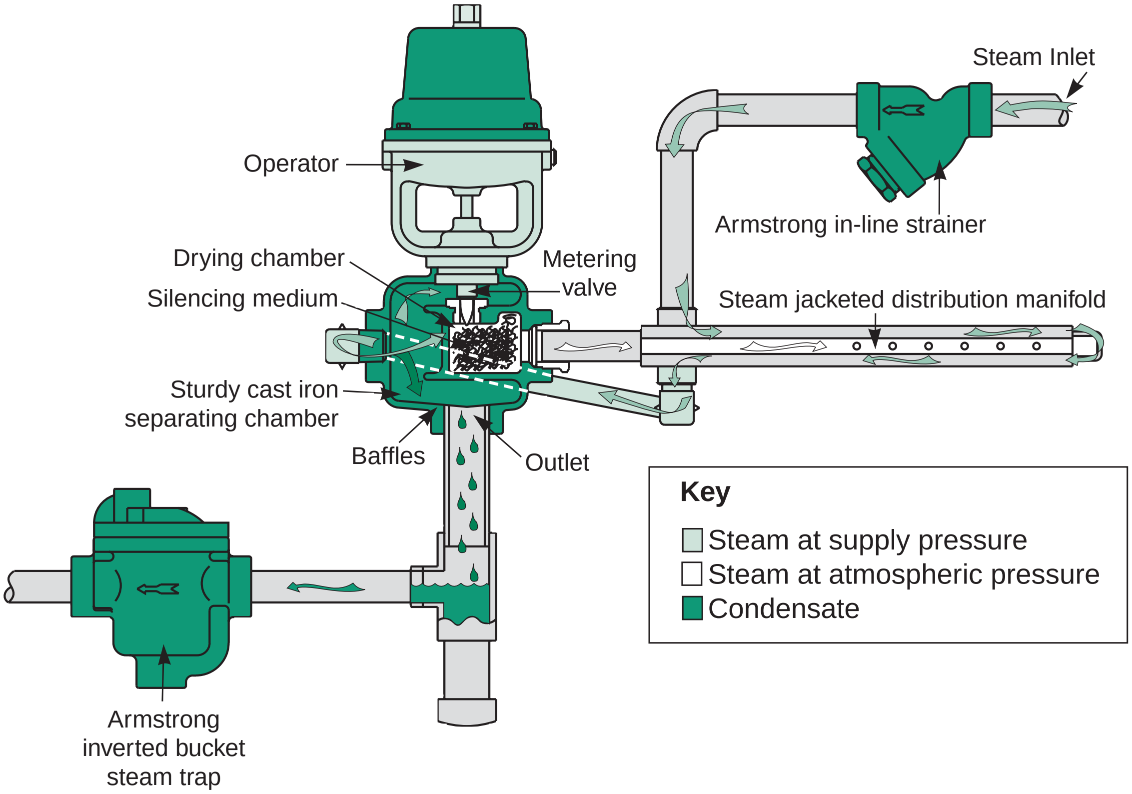

The following capacity table pertains to Model AMA 90 (using the Armstrong C-1801 pneumatic operator) or alternatives using electric modulating, electronic modulating or electric on/off control. Any operator used on Sizes 91, 92, 93 or 94 can be used on Size 90.

Table 70-1. Continuous Discharge Capacities in lbs. of Steam Per Hour

Orifice Size, In.	Steam Pressure, psig																						
	2	3	4	5	6	7	8	9	10	11	12	13	14	15	20	25	30	35	40	45	50	55	60
1/16	1.3	1.7	2.0	2.3	2.6	2.8	3.0	3.2	3.4	3.6	3.8	4.0	4.2	4.4	5.6	6.5	7.7	8.4	9.2	10.0	11.0	11.8	12.3
5/64	2.1	2.7	3.2	3.7	4.1	4.4	4.8	5.1	5.4	5.7	6.0	6.2	6.4	6.7	8.4	10.6	11.2	12.4	13.0	14.8	16.0	17.8	19.0
3/32	3.0	3.9	4.6	5.2	5.8	6.3	6.8	7.3	7.8	8.2	8.6	9.0	9.3	9.6	11.9	13.4	14.3	17.2	19.2	21.2	22.8	23.7	24.4
7/64	4	5	6	7	8	8	9	10	10	11	11	12	12	13	16	18	19	21	24	26	28	31	33
1/8	5	7	8	9	10	11	12	13	14	14	15	16	17	18	23	25	28	30	33	35	37	40	44
5/32	8	10	12	14	16	17	19	20	21	22	23	25	26	27	31	36	40	44	48	—	—	—	—
3/16	12	15	18	21	23	26	27	29	31	32	35	36	37	40	47	—	—	—	—	—	—	—	—
7/32	16	21	25	29	32	35	37	40	42	44	47	49	—	—	—	—	—	—	—	—	—	—	—
1/4	22	28	33	38	42	46	49	—	—	—	—	—	—	—	—	—	—	—	—	—	—	—	—
9/32	26	32	38	43	47	50	—	—	—	—	—	—	—	—	—	—	—	—	—	—	—	—	—
5/16	32	38	44	50	—	—	—	—	—	—	—	—	—	—	—	—	—	—	—	—	—	—	—
11/32	36	43	50	—	—	—	—	—	—	—	—	—	—	—	—	—	—	—	—	—	—	—	—
3/8	42	50	—	—	—	—	—	—	—	—	—	—	—	—	—	—	—	—	—	—	—	—	—

Metric Conversion: lb/hr x .4536 = kg/hr; psig x 6.89 = kPa

All dimensions and weights are approximate. Use certified print for exact dimensions. Design and materials are subject to change without notice.

Figure 71-1. Dimensions

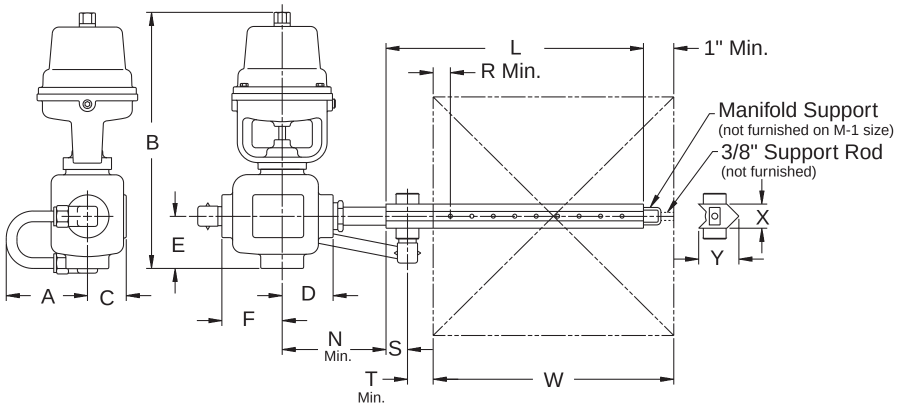

Table 71-1. Physical Data

Dimensions, Inches						Connection Sizes			Drain Trap Model	Weight, lbs. † (less operator and manifold)
A	B	C	D	E	F	Inlet	Drain	Trap		
4-1/8	*	1-7/8	2-3/8	2-7/16	2-13/16	1/2" NPT	1" NPT	1/2" NPT	800	13-1/2

†Weight includes drain trap, strainer and fittings.
*See Table 57-1, Page 57, for dimensions for "B".

Table 71-2. Manifold Cross-Section Dimensions

"N"	"R"	"S"	"T"	"X"	"Y"	"Z"	Steam Supply
5-3/8"	2"	1"	1"	1-1/4"	1-7/8"	1-13/16	1/2" NPT

Figure 71-2. Manifold Options

The Model 90 must be specified for horizontal or vertical manifold installation. Horizontal is fairly obvious, but the vertical designation can be confusing. Vertical refers to the **direction of air flow**, not the position of the manifold. See the following sketches for clarification.

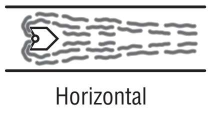
Horizontal

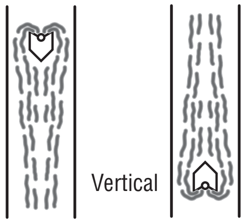
Vertical

If the manifold itself is to be vertical, a manifold pipe adapter (A-4967-B) should be specified, **not** one of the above designations.

Table 71-3. List of Materials

Steam Chamber	Cast Iron
Bonnet & Assembly	Brass
Valve & Stem	18-8 SS
Valve Seat	18-8 SS
Manifold	304 SS
Manifold Fittings	Brass
Manifold Coupler	Brass
Nut	Brass
Strainer	Cast Iron
Tubing	Copper
Compression Fittings	Brass
Steam Trap	Cast Iron

Note: Dotted line fittings are not supplied with humidifier.

Table 71-4. Manifold Lengths and Duct Widths with which they may be used

Vertical Manifold Model No.		MV-1	MV-1.5	MV-2	MV-3	MV-4	MV-5	MV-6	MV-7	MV-8	MV-9	MV-10	MV-11	MV-12
Horizontal Manifold Model No.		MH-1	MH-1.5	MH-2	MH-3	MH-4	MH-5	MH-6	MH-7	MH-8	MH-9	MH-10	MH-11	MH-12
L (Length)		12"	18"	24"	36"	48"	60"	72"	84"	96"	108"	120"	132"	144"
W-Duct Width	(Min.)	8"	15"	21"	31"	43"	53"	65"	77"	89"	101"	113"	125"	137"
	(Max.)	14"	20"	30"	42"	52"	64"	76"	88"	100"	112"	124"	136"	148"
Shipping Weight, lbs. Approx.		4	5	6	9	11	13	16	18	21	22	25	28	30

Note: Insulated manifolds are available. Consult factory.

The Armstrong Model 90 humidifier, continued…

(physical data, dimensions and capacities)

Humidifier Operators.

Pneumatic Modulating
Electric Modulating
Electronic Modulating
Electric On-Off (Solenoid)

Standard Package.

The Armstrong Model 90 conditioned- steam humidifier is supplied in a standard “package” which includes the following.

Pneumatically controlled (AMA) models:

1. Humidifier.
2. Distribution manifold of length specified.
3. “Y” type strainer.
4. Armstrong inverted bucket trap.

Electric motor controlled (EM) models:

1. Humidifier with integral operator.
2. Distribution manifold of length specified.
3. “Y” type strainer.
4. Armstrong inverted bucket trap.

Recommended option: A pneumatic or an electric temperature switch is offered as an optional extra and is recommended in any system where the steam supply to the manifold jacket and humidifier body may be interrupted or turned off.

How To Order.

1. Mode of control:
   pneumatic modulating—AMA
   electric modulating—EM
   electric on-off—DSA*

*For industrial in-plant operation and for certain very limited duct applications, a solenoid actuator may be used to provide simple on-off operation. This type of actuator should not be specified for duct applications without a detailed analysis of the system.

2. Size of humidifier for duct installation—90.

3. Manifold length from appropriate table. Specify horizontal or vertical steam flow.

4. Specify steam pressure and capacity required in accordance with appropriate tables.

5. For electrically operated models, state electrical characteristics (control signal and power supply voltage).

The Armstrong Series 1000 stainless steel humidifier

(physical data, dimensions and capacities)

Armstrong also offers a steam separator-type humidifier for use in sensitive environments where pure demineralized, deionized or distilled water is used to generate clean steam.

All wetted parts of the humidifier package are stainless steel, so the carry-over of impurities created by this highly corrosive water is minimized. Whenever carryover of impurities is a problem in steam discharge, the Armstrong Series 1000 solves it – with precisely controlled, trouble-free steam humidification.

- **Reduced corrosion threat.** Since Armstrong uses stainless steel for all wetted parts, the Series 1000 prevents problems caused by corrosion and subsequent carry-over of corrosion by-products.
- **No condensation through radiation.** The internal plug-type metering valve is an integral part of the steam separator and is completely steam jacketed to prevent condensation through radiation. What's more, the **steam jacketed** steam distribution manifold completely surrounds the distribution pipe with steam at supply pressure, further reducing condensation due to radiation loss.
- **Effective silencing.** Thanks to a drying chamber that is jacketed by the separating chamber and filled with a stainless steel silencing medium, most of the noise of escaping steam is absorbed.
- **Dry steam discharge.** Steam entering the drying chamber is at supply temperature and essentially atmospheric pressure, so any remaining mist is re-evaporated.
- **Maximum separation.** The interior baffle **conditions** the steam by forcing it to make two 180° turns, assuring optimum velocity reduction and maximum separation.
- **Dependable inverted bucket drainage.** With only two moving parts, the reliable, energy saving inverted bucket steam trap provides reliable drainage with a design that allows failure open – important on open-end service.

For Series 1000 humidifier capacities, see Pages 57 and 58.

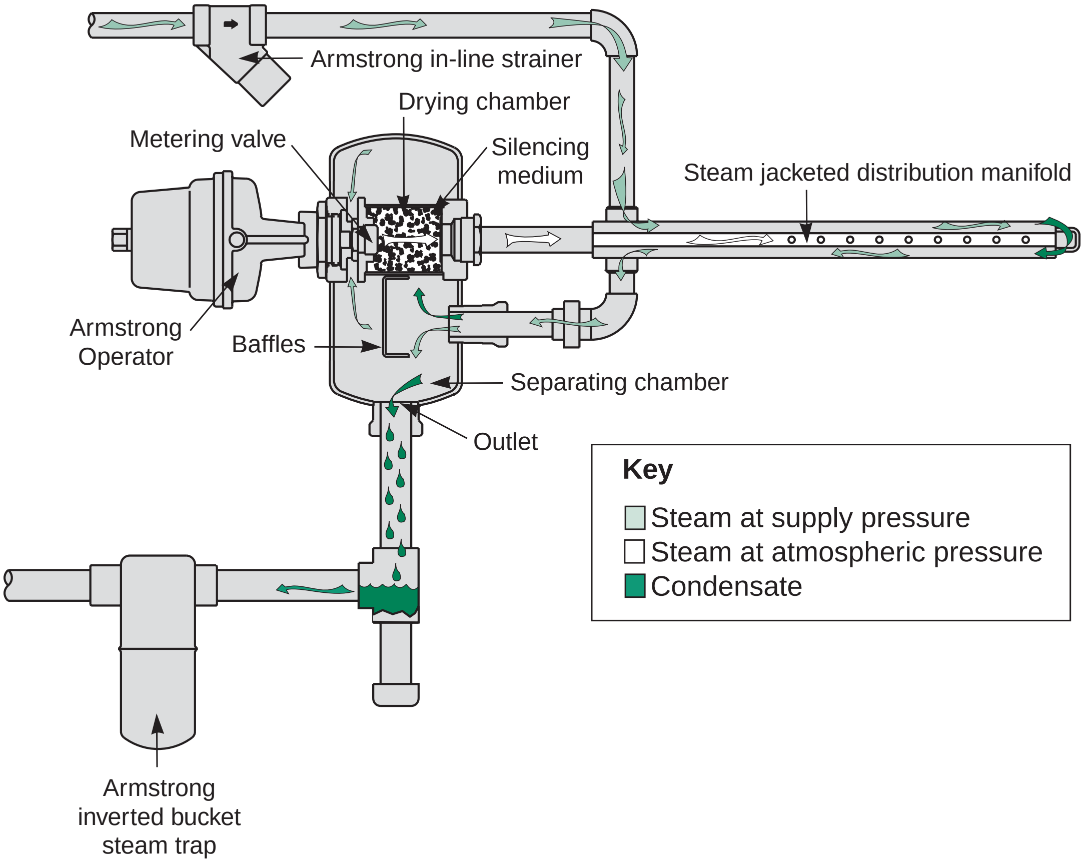

The Armstrong Series 1000 humidifier, continued…

(physical data, dimensions and capacities)

Humidifier Operators.

Pneumatic Modulating
Electric Modulating
Electronic Modulating

Standard Package.

All Armstrong conditioned-steam humidifiers are supplied in standard "packages" which include the following.

Pneumatically controlled (AM) models:

1. Humidifier.
2. Distribution manifold of length specified.
3. "Y" type strainer.
4. Armstrong inverted bucket trap.

Electric motor controlled (EM) models:

1. Humidifier with integral operator.
2. Distribution manifold of length specified.
3. "Y" type strainer.
4. Armstrong inverted bucket trap.

Recommended option: A pneumatic or an electric temperature switch is offered as an optional extra and is recommended in any system where the steam supply to the manifold jacket and humidifier body may be interrupted or turned off.

Table 74-1. List of Materials

Steam Chamber	T-316 CF8M Stainless Steel
Bonnet & Assembly Valve & stem Valve Seat Manifold & Fittings	18-8 Stainless Steel
Operator	See Specifics
Strainer	ASTM 351 (T-316 SS)
IB Steam Trap	T-304 Stainless Steel

Figure 74-1. Dimensions

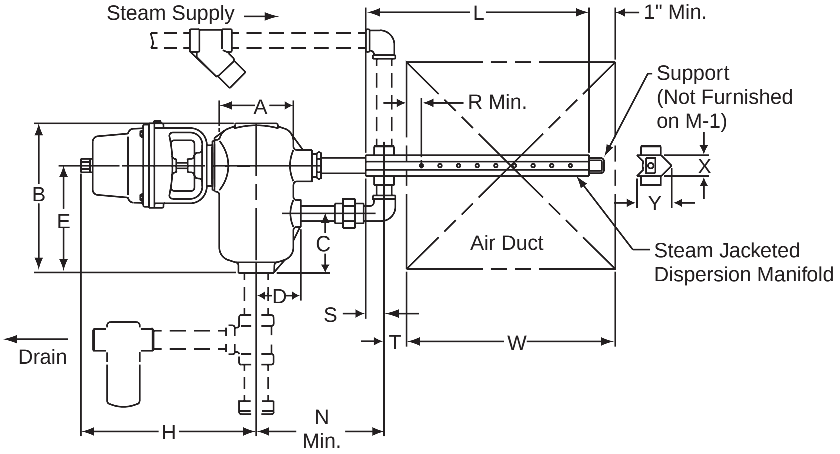

Table 74-2. Dimensions

Model No.	Dimensions, Inches											
	A	B	C	D	E	N	R	S	T	X	Y	Z
1100	4-1/8	8-5/16	3-5/16	2-15/32	6	5-11/16	2	1	1	1-1/4	1-7/8	1-13/16
1200	4-1/2	10-5/16	3-3/4	3-13/16	6-11/16	8-9/16	2	1	1	1-3/4	2-5/8	2-1/16
1300	6-5/8	16-1/4	6	5-9/16	10-5/16	9-1/16	2	1-5/8	1-5/8	2-1/8	3-1/8	—
1400	10-3/4	24-1/8	8-15/16	9-5/16	14-11/16	13-1/2	2	1-5/8	1-5/8	3-1/4	4-1/4	—

Table 74-3. Dimensions, Continued

Model No.	Connection Sizes			Drain Trap Model	Weight, lbs. † (less operator and manifold)
	Inlet	Drain	Trap		
1100	1/2" NPT	1" NPT	3/4" NPT	1811	35
1200	3/4" NPT	1" NPT	3/4" NPT	1811	30
1300	1-1/4" NPT	1-1/4" NPT	3/4" NPT	1811	32
1400	2" NPT	2" NPT	3/4" NPT	1812	80-1/4

†Weight includes drain trap, strainer and fittings.

Notes: 1. For manifold lengths and duct widths with which they may be used, see Table 75-2, Page 75.
3. All wetted parts are 300 Series stainless steel.

All dimensions and weights are approximate. Use certified print for exact dimensions. Design and materials are subject to change without notice.

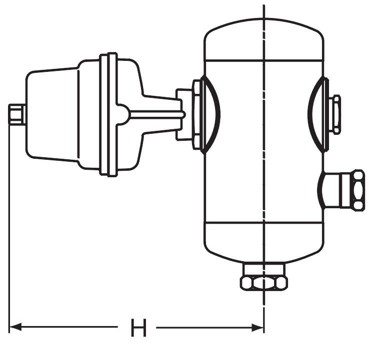

Table 75-1. Dimensions with Operators Installed

	Pneumatic Modulating			Electric Modulating			Electric On-Off
Mode of Control	**Armstrong C-1801**	**Honeywell MP953D**	**Invensys MK4411 & MK4421**	**Honeywell M9182A**	**Belimo AF24SR**	**Belimo NVF24-MFT-US-E**	**ASCO**
"H" - 1100	9-3/8"	8"	12-1/2"	13"	16-1/16"	14-9/16"	4-3/8"
1200	9-9/16"	8-3/16"	12-9/16"	13-3/16"	16-1/4"	14-3/4"	4-9/16"
1300	10-3/4"	9-1/4"	13-3/4"	14-1/4"	17-5/16"	15-13/16"	5-5/8"
1400	—	11-5/16"	15-3/4"	16-5/16"	19-3/8"	—	—
Weight of Operator	7-3/4 lbs.	6 lbs.	6-1/4 lbs.	12 lbs.	13 lbs.	4-1/4 lbs.	3/4 lbs.

Table 75-2. Manifold Lengths and Duct Widths with which they may be used

Manifold Model No.		**M-1**	**M-1.5**	**M-2**	**M-3**	**M-4**	**M-5**	**M-6**	**M-7**	**M-8**	**M-9**	**M-10**	**M-11**	**M-12**
L (Length)		12"	18"	24"	36"	48"	60"	72"	84"	96"	108"	120"	132"	144"
W-Duct Width	(Min.)	8"	15"	21"	31"	43"	53"	65"	77"	89"	101"	113"	125"	137"
	(Max.)	14"	20"	30"	42"	52"	64"	76"	88"	100"	112"	124"	136"	148"
Shipping Weight, lbs. Approx.	1100	3	4	5	6	8	10	12	14	15	17	19	21	23
	1200	4	5	6	9	11	13	16	18	21	22	25	28	30
	1300	6	8	10	13	17	21	24	29	32	37	41	43	46
	1400	Consult Factory				24	30	34	40	45	51	55	60	64

Note: Insulated manifolds are available. Consult factory.

How To Order.

1. Mode of control:
   pneumatic modulating—AM
   electric modulating—EM

2. Size of humidifier for duct installation —1100, 1200,1300 or 1400.

3. Manifold length from Table 75-2.

4. Specify steam pressure and capacity required in accordance with appropriate table on Pages 57 and 58.

5. For electrically operated models, state electrical characteristics (control signal and power supply voltage).

All dimensions and weights are approximate. Use certified print for exact dimensions. Design and materials are subject to change without notice.

Physical data, dimensions and capacities for Armstrong humidifiers in metric units

Table M56-1 and M74-2. Physical Data

Humidifier Model Number	Dimensions, mm						Connection Sizes			Drain Trap Model	Weight, kgs. † (less operator and manifold)
	A	B*	C	D	E	F	Inlet	Drain	Trap		
90	105	225	48	60	62	71	DN 15	DN 25	DN 15	800	6
91	115	218	86	78	154	97	DN 15	DN 25	DN 20	800	11
92	141	218	86	97	154	97	DN 20	DN 25	DN 20	800	14
93	171	302	117	121	229	121	DN 32	DN 32	DN 20	811	24
94	276	435	175	203	321	203	DN 50	DN 50	DN 20	812	66
1100	105	211	84	63	153	—	DN15	DN25	DN20	1811	14
1200	114	262	101	97	170	—	DN 20	DN 25	DN 20	1811	14
1300	168	417	152	141	262	—	DN 32	DN 32	DN 20	1811	15
1400	273	613	227	236	373	—	DN 50	DN 50	DN 20	1812	36

†Weight includes drain trap, strainer, and fittings. *Add height and weight of operator for overall data. All dimensions are in millimeters.

Table M57-1. Sizes 90, 91 and 1100, Continuous Discharge Capacities in kgs. of Steam Per Hour

Orifice Size (In)	Steam Pressure, Bar																	
	0.15	**0.20**	**0.25**	**0.35**	**0.40**	**0.50**	**0.55**	**0.60**	**0.70**	**0.75**	**0.80**	**0.90**	**1.00**	**1.40**	**1.70**	**2.00**	**2.50**	**3.00**	**4.00**
1/16	0.6	0.7	0.8	1	1.1	1.2	1.3	1.4	1.5	1.6	1.7	1.8	2	2.5	2.9	3.5	3.8	4.5	5.6
5/64	1	1.2	1.4	1.6	1.8	2	2.1	2.3	2.4	2.5	2.7	2.8	3.0	3.8	4.8	5	5.6	6.7	8.6
3/32	1.4	1.7	1.9	2.3	2.6	2.8	3	3.3	3.5	3.7	3.9	4	4.3	5.4	6	6.5	7.8	9.6	11
7/64	1.9	2.2	2.6	3.1	3.6	4	4.1	4.5	4.6	5	5.2	5.4	6	7.2	8	8.6	9.5	12	15
1/8	2.5	3.1	3.3	4	4.5	5	5.5	5.9	6.3	6.3	6.8	7.2	8	10	11	13	14	16	20
5/32	3.6	4.5	5.1	6.3	7.2	7.7	8.6	9	9.5	10	11	12	13	14	16	18	20	24	29
3/16	5.5	6.8	7.7	10	11	12	12	13	14	15	16	17	18	22	24	27	29	35	42
7/32	7.5	10	11	13	15	16	17	18	19	20	21	22	24	28	32	35	38	44	64
1/4	10	13	14	17	19	21	22	24	25	27	28	29	31	37	41	46	52	61	77
9/32	12	15	16	20	21	23	25	26	28	29	30	32	34	40	48	52	57	68	84
5/16	15	17	19	23	25	27	29	31	33	35	37	39	42	48	56	61	67	90	114
11/32	16	20	22	25	30	33	35	37	39	41	43	44	49	58	67	78	86	104	126
3/8	19	23	25	30	32	35	37	42	44	48	50	52	57	68	77	86	96	115	143

Note: Capacities below darkened line pertain to Size 91 and 1100 only.

Table M57-2. Sizes 92 and 1200, Continuous Discharge Capacities in kgs. of Steam Per Hour

Orifice Size (In)	Steam Pressure, Bar																	
	0.15	**0.20**	**0.25**	**0.35**	**0.40**	**0.50**	**0.55**	**0.60**	**0.70**	**0.75**	**0.80**	**0.90**	**1.00**	**1.40**	**1.70**	**2.00**	**2.50**	**3.00**	**4.00**
1/8	2.2	3.2	3.6	4	4.5	5	5.5	6	6.8	7	8	9	10	11	12	13	14	16	20
5/32	3.6	4.5	5.5	6.3	7.3	7.7	8.6	9	9.5	10	11	12	13	14	16	18	20	24	29
3/16	5.4	6.8	8.2	9.5	10	11	12	13	14	15	16	17	18	21	24	27	29	35	42
7/32	7.2	9.5	11	13	15	16	17	18	19	20	21	22	24	28	32	38	41	47	61
1/4	10	11	15	17	19	21	22	24	25	27	28	29	31	37	41	46	52	61	77
9/32	12	16	19	22	24	26	29	30	32	34	36	37	40	47	53	59	69	80	97
5/16	15	20	23	27	30	32	35	37	39	42	44	45	49	57	65	72	85	96	118
11/32	18	24	28	32	35	38	41	44	46	49	52	54	59	69	78	87	101	114	142
3/8	24	27	29	35	38	42	45	47	52	54	56	58	63	74	83	93	103	122	151
7/16	34	38	41	45	49	53	56	60	62	65	68	72	77	89	102	114	126	157	190
1/2	40	43	45	47	51	55	60	64	68	72	76	79	88	104	121	136	151	181	220

Table M58-1. Sizes 93 and 1300, Continuous Discharge Capacities in kgs. of Steam Per Hour

Orifice Size (In)	Capacities when Steam Supply is Through the Manifold																		
	Steam Pressure, Bar																		
	0.15	**0.20**	**0.25**	**0.35**	**0.40**	**0.50**	**0.55**	**0.60**	**0.70**	**0.75**	**0.80**	**0.90**	**1.00**	**1.40**	**1.70**	**2.00**	**2.50**	**3.00**	**4.00**
13/32	32	38	45	50	55	60	63	67	69	73	77	78	84	96	112	122	135	161	200
7/16	35	43	49	57	59	63	66	70	77	80	86	89	97	112	129	142	152	182	225
15/32	38	55	59	66	68	71	76	82	88	92	96	102	108	128	145	161	175	203	248
1/2	45	58	66	73	78	84	90	92	98	103	110	115	123	146	165	185	197	227	282
9/16	47	62	72	84	89	94	102	108	117	121	123	128	141	163	185	207	234	279	342
5/8	53	67	79	92	97	106	114	124	131	134	144	153	167	194	221	248	275	328	408
3/4	58	79	92	105	116	130	140	153	164	170	173	186	208	249	289	338	385	452	576

All dimensions and weights are approximate. Use certified print for exact dimensions. Design and materials are subject to change without notice.

Table M58-2. Sizes 93 and 1300, Continuous Discharge Capacities in kgs. of Steam Per Hour

Capacities when Steam Supply is Direct to Separator. (Manifold Trapped Separately)

Orifice Size (In)	Steam Pressure, Bar																		
	0.15	0.20	0.25	0.35	0.40	0.50	0.55	0.60	0.70	0.75	0.80	0.90	1.00	1.40	1.70	2.00	2.50	3.00	4.00
13/32	32	38	45	50	55	60	63	67	69	73	77	78	84	96	112	122	135	161	200
7/16	35	43	49	57	59	63	66	70	77	80	86	89	97	112	130	142	152	182	225
15/32	38	55	59	66	68	71	76	82	88	92	96	102	108	128	145	161	175	203	248
1/2	45	58	66	73	78	84	90	92	98	103	110	115	123	146	165	185	197	227	282
9/16	47	62	72	84	89	94	102	108	117	121	123	128	141	163	185	207	234	279	342
5/8	57	73	83	95	102	112	119	129	139	142	152	162	173	209	232	261	291	343	443
3/4	62	85	100	119	122	136	152	171	186	195	210	225	238	288	336	375	422	500	620

Table M58-3. Sizes 94 and 1400, Continuous Discharge Capacities in kgs. of Steam Per Hour

Capacities when Steam Supply is Through the Manifold.

Orifice Size (In)	Steam Pressure, Bar															
	0.15	0.20	0.25	0.35	0.40	0.50	0.55	0.60	0.70	0.75	0.80	0.90	1.00	1.40	1.70	2.00
5/8	62	76	86	97	102	114	121	131	142	148	159	169	188	217	245	275
3/4	84	103	117	132	140	154	164	177	193	201	215	229	252	310	350	390
7/8	110	135	153	171	184	202	215	232	251	264	282	300	344	396	452	503
1	126	156	177	198	212	234	248	269	290	304	326	347	386	450	514	575
1-1/8	145	180	204	230	245	269	286	310	339	351	376	400	422	507	591	666
1-1/4	156	190	215	251	259	284	302	327	361	371	396	422	448	536	631	711
1-1/2	177	222	253	282	303	334	354	384	417	435	465	496	523	633	729	824

Table M58-4. Sizes 94 and 1400, Continuous Discharge Capacities in kgs. of Steam Per Hour

Capacities when Steam Supply is Direct to Separator. (Manifold Trapped Separately).

Orifice Size (In)	Steam Pressure, Bar																		
	0.15	0.20	0.25	0.35	0.40	0.50	0.55	0.60	0.70	0.75	0.80	0.90	1.00	1.40	1.70	2.00	2.50	3.00	4.00
5/8	62	76	86	97	102	114	121	131	142	148	159	169	188	217	245	275	303	357	461
3/4	90	110	125	140	150	165	175	190	205	215	230	244	275	321	358	404	445	533	656
7/8	114	140	159	178	191	210	222	241	260	273	292	311	358	412	461	520	576	697	847
1	136	170	193	222	231	254	270	293	326	332	355	378	425	488	559	632	693	832	1038
1-1/8	168	210	238	267	286	314	333	362	378	410	438	467	505	605	698	769	859	1026	1280
1-1/4	187	235	267	300	320	352	373	405	435	459	490	523	551	674	784	883	979	1182	1454
1-1/2	245	299	340	381	408	449	476	517	547	585	626	667	699	843	961	1096	1201	1448	1823

Table M53-1. Operator Spring Ranges for Pneumatically Controlled Humidifiers

Armstrong C-1801		Honeywell MP953D	
Operating Range	Adjustable Start Points	Operating Range	Non-adjustable Start Points
.34 bar	.21 bar minimum	.27 bar	.21 bar
*.69 bar	.21 bar minimum	.34 bar	.55 bar
		*.48 bar	.27 bar

*Standard spring - furnished when no spring range is specified.

Note: Please consult Armstrong for choice of pneumatic actuator on 94 size humidifier when steam pressure is above 2 bar.

Armstrong

Physical data, dimensions and capacities for Armstrong humidifiers in metric units, continued…

STEAM DISTRIBUTION MANIFOLD DATA

Table M55-1. Dimensions with Operators Installed

	Pneumatic Modulating			Electric Modulating			Electric On-Off
Mode of Control	**Armstrong C-1801**	**Honeywell MP953D**	**Invensys MK4411 & MK4421**	**Honeywell M9182A**	**Belimo AF24SR**	**Belimo NVF24-MFT-US-E**	**ASCO**
"B" - 90 Size	301mm	264mm	378mm	378mm	470mm	381mm	178mm
91 Size	406mm	368mm	483mm	479mm	560mm	481mm	276mm
92 Size	406mm	368mm	483mm	479mm	576mm	481mm	276mm
93 Size	495mm	454mm	563mm	562mm	665mm	565mm	368mm
94 Size	—	622mm	—	708mm	789mm	697mm	—
"H" - 1100 Size	238mm	203mm	318mm	330mm	407mm	370mm	111mm
1200 Size	243mm	208mm	319mm	335mm	413mm	375mm	116mm
1300 Size	273mm	235mm	349mm	362mm	440mm	402mm	143mm
1400 Size	—	287mm	400mm	414mm	492mm	—	—
Weight of Operator	3.5 kgs.	2.7 kgs.	2.8 kgs.	5.4 kgs.	5.9 kgs.	2 kgs.	.3 kgs.

Table M61-1 and M69-2. Cross-Section Dimensions (Millimeters)

Model	"N"	"R"	"S"	"T"	"X"	"Y"	"Z"	Steam Supply
90	137	51	25	25	32	48	46	1/2" NPT
91	145	51	25	25	32	48	46	1/2" NPT
1100	217	150	25	25	32	48	46	1/2" NPT
92 & 1200	218	51	25	25	44	67	52	3/4" NPT
93 & 1300	230	51	41	41	54	79	—	1-1/4" NPT
94 & 1400	343	51	41	41	83	108	—	2" NPT

Table M61-2 and 69-4. Manifold Lengths and Duct Widths with which they may be used

90 Size Vertical Manifold Model No.		MV-1	MV-1.5	MV-2	MV-3	MV-4	MV-5	MV-6	MV-7	MV-8	MV-9	MV-10	MV-11	MV-12
90 Size Horizontal Manifold Model No.		MH-1	MH-1.5	MH-2	MH-3	MH-4	MH-5	MH-6	MH-7	MH-8	MH-9	MH-10	MH-11	MH-12
91 thru 94 Size and 1000 Manifold Model No.		M-1	M-1.5	M-2	M-3	M-4	M-5	M-6	M-7	M-8	M-9	M-10	M-11	M-12
L (Length) (Meters)		0.30	0.45	0.61	0.91	1.22	1.52	1.83	2.13	2.44	2.74	3.05	3.35	3.66
W-Duct Width	(Minimum)	0.20	0.38	0.53	0.79	1.09	1.36	1.66	1.97	2.27	2.58	2.88	3.18	3.49
	(Maximum)	0.36	0.51	0.76	1.07	1.32	1.63	1.93	2.24	2.54	2.84	3.15	3.45	3.76
Shipping Weight, Kgs. Approximate	90 Size	1.8	2.3	2.7	4.0	5.0	5.9	7.2	8.2	9.5	9.8	11.3	12.7	13.6
	91 Size	1.4	1.8	2.3	2.7	3.6	4.5	5.4	6.3	6.8	7.7	8.6	9.5	10.4
	92 Size and 1200	1.8	2.3	2.7	4.0	5.0	5.9	7.2	8.2	9.5	9.8	11.3	12.7	13.6
	93 Size	2.7	3.6	4.5	5.9	7.7	9.5	10.9	13.1	14.5	16.8	18.6	19.5	20.9
	94 Size	Consult Factory				10.9	13.6	15.4	18.1	20.4	23.1	24.9	27.2	29.0

All dimensions and weights are approximate. Use certified print for exact dimensions. Design and materials are subject to change without notice.

ELECTRICALLY OPERATED “ON-OFF” UNIT HUMIDIFIERS

Table M63-1. Dimensions

Model No.	B	C	D	E	F	H
FSA-91	472	86	97	154	400	78
FSA-92	472	86	97	154	400	97
FSA-93	533	117	121	229	464	121

Table M63-2. Dimensions

Model No.	B	C	D	E	F
VSA-91	276	86	97	154	78
VSA-92	276	86	97	154	97
VSA-93	368	117	121	229	121

Table M63-3. Physical Data on Armstrong Electrically Operated On-Off Humidifiers

Model Number	FSA-91	VSA-91	FSA-92	VSA-92	FSA-93	VSA-93
*Coil (watts) 120V, 50/60 Hz	10	10	10	10	10	10
*Motor (watts) 120V, 50/60 Hz	6	—	6	—	6	—
Humidistat (amps at 220V)	2.2	2.2	2.2	2.2	2.2	2.2
Shipping Weight (kg.)	13	10	15	12	31	28
Steam Inlet & Strainer	DN 15	DN 15	DN 20	DN 20	DN 32	DN 32
Drain Connection	DN 25	DN 25	DN 25	DN 25	DN 32	DN 32
Drain Trap No.	800	800	800	800	811	811

Table M63-4. Capacities, Armstrong Electrically Operated On-Off Humidifiers

Continuous discharge capacities in kgs. of steam per hour at steam pressure indicated at the humidifier.		FSA-91, VSA-91, DSA-91						FSA-92, VSA-92, DSA-92						FSA-93, VSA-93, DSA-93			
	Orifice Size	1/16"	3/32"	1/8"	5/32"	3/16"	7/32"	7/32"	1/4"	5/16"	3/8"	7/16"	1/2"	5/16"	3/8"	7/16"	1/2"
Steam Pressure Bar (ATM)	0.15	0.7	1.4	2.5	3.7	5.7	7.5	7.3	10	15	24	34	40	20	23	35	45
	0.30	0.9	2.1	3.7	5.7	8.5	12	11	17	27	32	43	46	29	39	49	66
	0.40	1.1	2.5	4.4	6.9	10	14	16	21	32	38	49	51	36	48	59	78
	0.60	1.4	3.2	5.6	8.8	13	17	18	24	37	47	59	64	40	53	66	90
	0.70	1.5	3.5	6.2	9.7	15	19	19	25	40	52	62	68	44	59	77	98
	0.80	1.6	3.8	6.6	10	16	20	20	27	42	56	68	75	48	64	86	110
	1.00	1.9	4.2	8.2	12	17	23	22	29	45	63	72	—	53	73	97	123
	1.40	2.5	5.4	10.4	14	21	28	24	31	49	73	—	—	62	84	112	—
	1.70	3.1	6.0	11.6	16	24	31	26	39	62	—	—	—	70	96	130	—
	2.00	3.4	6.5	12.7	18	27	34	38	46	72	—	—	—	79	108	—	—
	2.50	3.8	7.8	13.6	20	29	—	41	52	85	—	—	—	86	119	—	—
	2.75	4.2	8.7	14.8	22	32	—	44	57	—	—	—	—	94	129	—	—
	3.50	5.0	10.4	18.0	27	39	—	54	69	—	—	—	—	109	—	—	—
	4.00	5.6	11.1	20.0	29	—	—	61	77	—	—	—	—	122	—	—	—

*Other voltages available. Consult factory.

All dimensions and weights are approximate. Use certified print for exact dimensions. Design and materials are subject to change without notice.

Physical data, dimensions and capacities for Armstrong humidifiers in metric units, continued…

AIR OPERATED UNIT HUMIDIFIERS

Table M65-1. Dimensions

Model No.	B	C	D	E	F	H
AMAF-91A	406	86	97	154	78	370
AMAF-92A	406	86	97	154	97	389
AMAF-93	486	117	121	229	121	451

Table M65-2. Dimensions

Model No.	B	C	D	E	F
AM-91A	406	86	97	154	78
AM-92A	406	86	97	154	97
AM-93A	486	117	121	229	121

Table M65-3. Physical Data, Armstrong Air-operated Humidifiers

Model Number	AM-91A	AMAF-91A	AM-92A	AMAF-92A	AM-93A	AMAF-93A
Air Pressure Max. (bar)	1.4	1.4	1.4	1.4	1.4	1.4
Air Required for Fan @ 1.4 bar	--	2 CFM	--	2 CFM	--	2 CFM
Drain Connection	DN 25	DN 25	DN 25	DN 25	DN 32	DN 32
Drain Trap No.	800	800	800	800	811	811
Shipping Weight (kg.)	15	17	17	20	28	30
Steam Inlet & Strainer	DN 15	DN 15	DN 20	DN 20	DN 32	DN 32

Table M65-4. Capacities, Armstrong Air-operated Humidifiers

		AM-91A, AMAF-91A						AM-92A, AMAF-92A					AM-93A, AMAF-93A			
	Orifice Size	1/16"	3/32"	5/32"	7/32"	9/32"	3/8"	3/16"	1/4"	5/16"	3/8"	1/2"	13/32"	15/32"	9/16"	3/4"
Continuous discharge capacities in kgs. of steam per hour at steam pressure indicated at the humidifier. Steam Pressure Bar (ATM)	0.15	0.7	1.4	3.7	7.5	12	19	5.4	10	15	22	36	32	38	47	62
	0.30	0.9	2.1	5.7	12	17	25	8.2	15	23	34	45	45	59	72	100
	0.40	1.1	2.5	6.8	14	21	31	10	19	29	42	56	55	68	89	122
	0.60	1.4	3.2	8.8	17	25	—	12	22	35	49	65	63	76	102	—
	0.70	1.5	3.5	9.7	19	28	—	14	25	39	55	73	69	88	117	—
	0.80	1.6	3.8	10	20	29	—	16	28	44	62	82	77	96	123	—
	1.00	1.9	4.2	12	23	33	—	18	31	49	70	94	84	108	141	—
	1.40	2.5	5.4	14	28	—	—	21	37	58	82	—	96	128	—	—
	1.70	3.1	6.0	16	31	—	—	23	41	65	—	—	112	—	—	—
	2.00	3.4	6.5	18	34	—	—	26	46	72	—	—	122	—	—	—
	2.50	3.8	7.8	20	—	—	—	28	49	—	—	—	135	—	—	—
	2.75	4.2	8.7	22	—	—	—	30	53	—	—	—	—	—	—	—
	3.50	5.0	10.4	27	—	—	—	34	61	—	—	—	—	—	—	—
	4.00	5.6	11.1	29	—	—	—	38	67	—	—	—	—	—	—	—

STEAM SHOWER HUMIDIFIERS

Table M69-1. Physical Data and Capacities, Steam Shower Bodies and Operators

	Electrically Controlled†		Pneumatically Controlled	
Model No.	**DSA-91-SM***	**DSA-92-SM***	**AM-91-SM***	**AM-92-SM***
Shipping Wt., kg. (less manifold)	11	18	12	19
Inlet & Strainer Size	DN 15	DN 20	DN 15	DN 20
Drain Connection Size	DN 25	DN 25	DN 25	DN 25
Drain Trap No.	800	800	800	800
Trap Connection Size	DN 20	DN 20	DN 20	DN 20

*Full nomenclature includes length of manifold in feet as a suffix to the Model No.
†Specify voltage required. Various voltages available – consult factory.
Note: For larger sizes and capacities, consult factory.

Table M67-2. Manifold Lengths and Weights, Armstrong Steam Showers

Manifold Model No.		SM-1	SM-1.5	SM-2	SM-3	SM-4	SM-5	SM-6	SM-7	SM-8	SM-9	SM-10	SM-11	SM-12
L (Length) (Meters)		0.30	0.45	0.61	0.91	1.22	1.52	1.83	2.13	2.44	2.74	3.05	3.35	3.66
Shipping Wt., Kgs.	91 Size	1	2	2	3	4	5	5	—	—	—	—	—	—
	92 Size	3	3	4	5	6	7	8	9	10	11	12	13	14

Table M61-3. Number of Manifolds to be Stacked for Duct Heights Exceeding 900 mm

Duct Height	No. of Manifolds
900 mm -1500 mm	2
1500 mm -2000 mm	3
2000 mm -2500 mm	4
2500 mm - Up	5 or more

If you have specific vapor trail considerations, please contact the Armstrong HVAC Application Engineering Department.

Table M61-4. Multiple Manifold Pipe Sizes and Adapter Numbers

Humidifier Size	Manifold Pipe Adapter No.	Pipe Connection Size
91	A-4967-B	DN 15
92	A-4967	DN 20
93	A-4967-L	DN 25*
94	A-5002	DN 50
1100	A-4967-5	DN15
1200	A-4967-P	DN 20
1300	A-4967-R	DN 25*
1400	A-5002-C	DN 50

*Manifold tube is 1". Jacket connections are 1-1/4".

Armstrong ManiPack™
Steam Distribution Manifold Assembly

Armstrong offers a pre-assembled, steam jacketed, distribution manifold bank specifically for air handling units.

The ManiPack is for applications requiring a direct steam injection humidifier (i.e. Series 9000/1000) with multiple steam jacketed distribution manifolds. It is designed for economy and ease of installation.

Features

- Pre-assembled to reduce installation time.
- Convenient mounting tabs for easy attachment.
- All stainless steel steam supply header, steam jacketed distribution manifolds, and interconnecting pipes, with a choice of 304 SS or brass compression fittings.
- No black iron piping.
- Optional all stainless design for D.I. service.
- Standard, interchangeable replacement parts.
- Field convertible from left hand to right hand mounting.
- Custom tube spacing above 6" minimum.

Table 82-1. List of Materials

Description	Material
Header Assembly Steam Jacketed Distribution Manifolds Interconnecting Distribution Manifold Piping Outboard Manifold Support	304 Stainless Steel
Header and Manifold Compression Fittings	Brass or 304 Stainless Steel

Table 82-2. Physical Data

Steam Supply Inlet	
91 Size Humidifier	1/2" MNPT
92 Size Humidifier	3/4" MNPT
93 Size Humidifier	1" MNPT
94 Size Humidifier	2" MNPT
Steam Condensate Drain	
All Sizes	3/4" MNPT
Steam Jacket Inlet & Condensate Drain	
91 Size Manifold	1/2" FNPT
92 Size Manifold	3/4" FNPT

All dimensions and weights are approximate. Use certified print for exact dimensions. Design and materials are subject to change without notice.

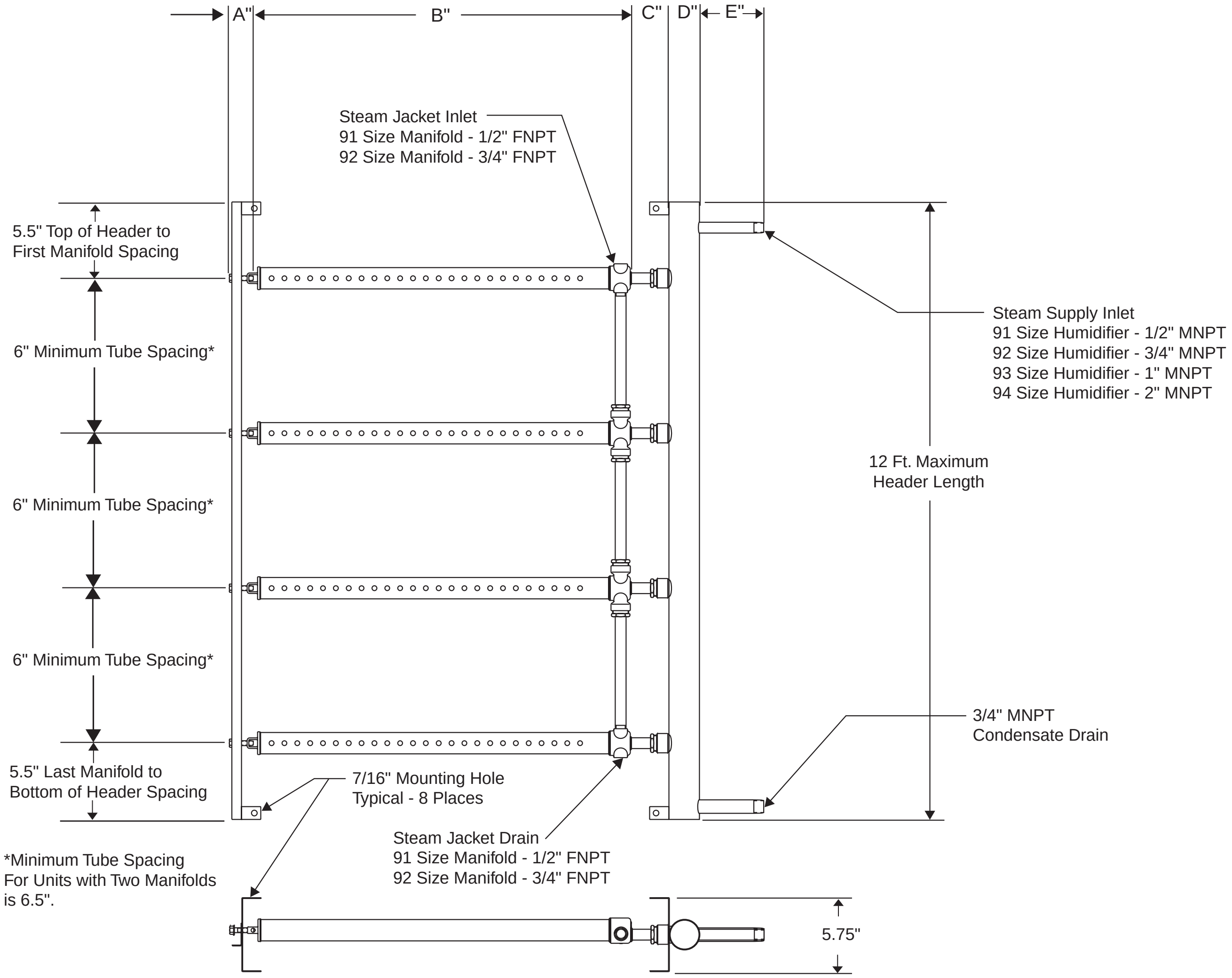

Table 83-1. ManiPack Dimensions and Header Capacities

A in(mm)	B in(mm)	Dimensions Based on Steam Capacity and Manifold Size									E in(mm)
		Steam Capacity lb/hr (kg/hr)									
		0 - 486 (0 - 220)			487 - 1000 (221 - 453)			1001+ (454+)			
		C in(mm)		D in(mm)	C in(mm)		D in(mm)	C in(mm)		D in(mm)	
		91 Manifold	92 Manifold		91 Manifold	92 Manifold		91 Manifold	92 Manifold		
2 (51)	12 (305)	2 (51)	5 (127)	2-3/8 (60)	2 (51)	4-1/2 (114)	3-1/2 (89)	2 (51)	3-1/2 (89)	5-9/16 (141)	3 (76) 4 (100) 5 (127) 6 (152) 7 (178)
	18 (457)										
	24 (610)										
	36 (914)										
	48 (1219)										
	60 (1524)										
	72 (1829)										
	84 (2133)										
	96 (2438)										
	108 (2743)										
	120 (3048)										
	132 (3352)										
	144 (3657)										

All dimensions and weights are approximate. Use certified print for exact dimensions. Design and materials are subject to change without notice.

Application Considerations

The ManiPack is designed for applications where it is desirable to use multiple steam distribution manifolds to achieve a downstream non-wetting distance (i.e. “vapor trail”) as short as three feet.

For non-wetting distances less than three feet, the Armstrong HumidiPack® or HumidiPackPlus® should be considered. Calculation of the non-wetting distance can be performed with the Armstrong Humid-A-ware™ Humidification Sizing & Selection Software which can be downloaded from www.armstrong-intl.com.

Steam jacketing is desirable because it improves steam quality and reduces the chance of spitting or dripping condensate into the air handling system. For applications that are sensitive to duct heat gain, it is advisable to keep steam jacketing pressures below 20 psig.

Suggested Piping

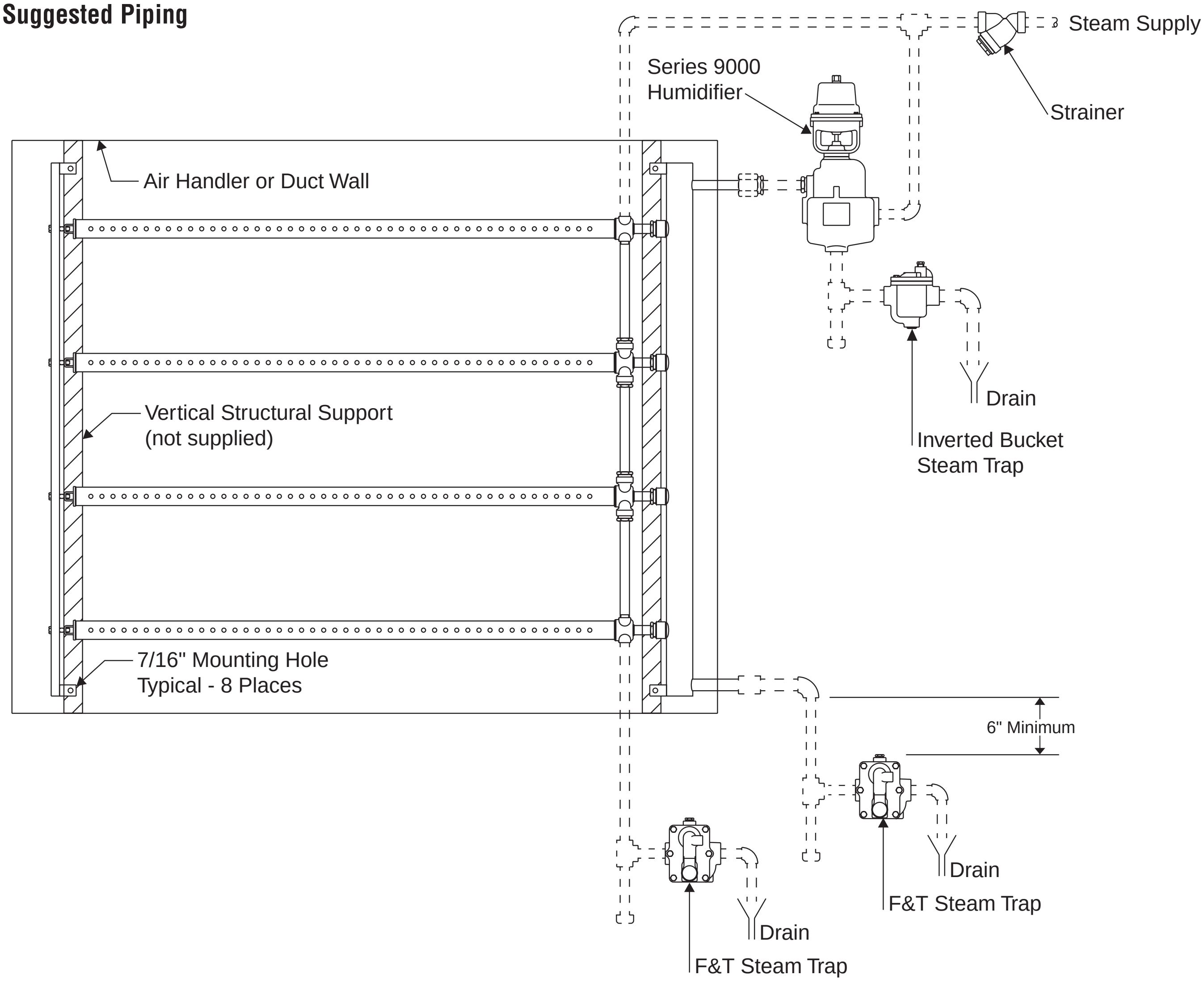

All dimensions and weights are approximate. Use certified print for exact dimensions. Design and materials are subject to change without notice.

Suggested Specification for ManiPack

Steam injection into air handling system for humidification purposes shall be by means of a pre-assembled, steam jacketed, multiple manifold bank. The header assembly and steam-jacketed distribution manifolds shall be 304 Stainless Steel. Use of black iron piping shall not be permitted.

The multiple manifold bank shall be capable of distributing up to 60 psig steam from a direct steam injection humidifier without dripping or spitting.

The multiple manifold bank shall have pre-drilled mounting tabs in four corners to allow easy attachment to structural supports within the air handler.

The multiple manifold bank shall be field repairable with standard interchangeable parts and shall be field convertible from left handed header configuration to right handed header configuration.

Required Ordering Information

1. Specify steam pressure and capacity required.

2. Determine steam injection humidifier size, manifold size, and manifold quantity as determined by Armstrong's Humid-A-ware Humidification Sizing and Selection software. Visit www.armstrong-intl.com to download.

3. Specify duct dimensions.

4. Specify required steam header orientation (i.e. left-handed or right handed).

5. Specify required materials of construction (i.e. brass and 304 stainless steel or all 304 stainless steel).

6. Consult Armstrong's HVAC Application Engineering Department for vertical airflow applications.

HumidiPack®,HumidiPackPlus® and HumidiPackPlus® CF Steam Humidifier Systems

Importance of Non-wetting Distance

Non-wetting distance is an important consideration in the proper application of steam humidification equipment. Shorter distances simplify the job of the design engineer by allowing proper placement of temperature and humidity controllers and other components without fear of inaccurate readings or moisture damaged equipment. Air handling unit manufacturers concerned about the "footprint" of their units and end users with limited space in mechanical rooms also benefit.

HumidiPack®

The Armstrong HumidiPack® is a pre-fabricated steam humidifier system that is ready for insertion into the duct. The HumidiPack consists of a separator/header and multiple tube dispersion assembly when supplied for use with Armstrong steam generators. A steam supply control valve, strainer, steam trap, and a header drain trap are added when HumidiPack is used on pressurized steam. The HumidiPack accepts steam, separates entrained moisture from it, and admits it into a duct or air handler air stream via the dispersion assembly in a manner which substantially reduces non-wetting distance when compared to traditional humidifiers.

HumidiPackPlus®

HumidiPackPlus® combines the non-wetting distance shortening performance of HumidiPack with the additional feature of steam jacketed "active" tubes. The result is a dry, uniform discharge of steam for nearly any application with a steam source from a pressurized, central supply.

Figure 86-1. HumidiPack

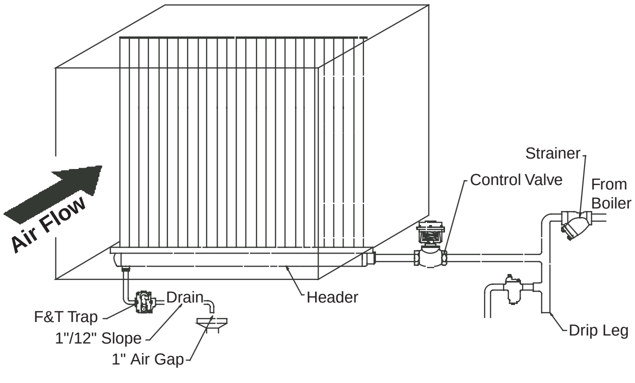

HumidiPack® CF

HumidiPack CF offers the performance of HumidiPackPlus without the need of jacketing steam on pressurized steam applications. Typically used with a vertical header configuration, HumidiPack CF offers excellent separation of entrained moisture from steam with preheated active tubes. The entire face area is cold during periods of no demand, adding no energy to the air stream.

Simplified Installation

The HumidiPack and HumidiPackPlus dispersion assemblies slide neatly into ductwork or air handling units. This frequently reduces the time and labor required for field installations. Units with horizontal tubes and vertical headers offer all piping on one side of the ductwork or air handler to simplify piping.

Stainless Steel Construction

HumidiPack and HumidiPackPlus rugged designs offer stainless steel construction of wetted parts including the header/separator and dispersion assembly for a long trouble-free operating life. Tube to header joints consist of welded stainless steel rather than assembled plastic adapters with o-rings, minimizing service requirements.

Compatible With Many Steam Sources

HumidiPack may be used with Armstrong Steam-to-Steam, gas and electric steam generating humidifiers, also with some systems including packaged boilers or central steam supply to 60 psig (4 bar). HumidiPackPlus may be used with packaged boilers or central steam supply to 60 psig (4 bar).

Application Flexibility

Many sizes and configurations of HumidiPack and HumidiPackPlus are available to meet new installation or retrofit needs.

Reduced Heat Gain to Duct Air from HumidiPack

Since no steam is admitted to the manifold assembly unless there is a demand for steam output, there is no heat gain to duct air when HumidiPack is not in use.

Figure 86-2. HumidiPackPlus

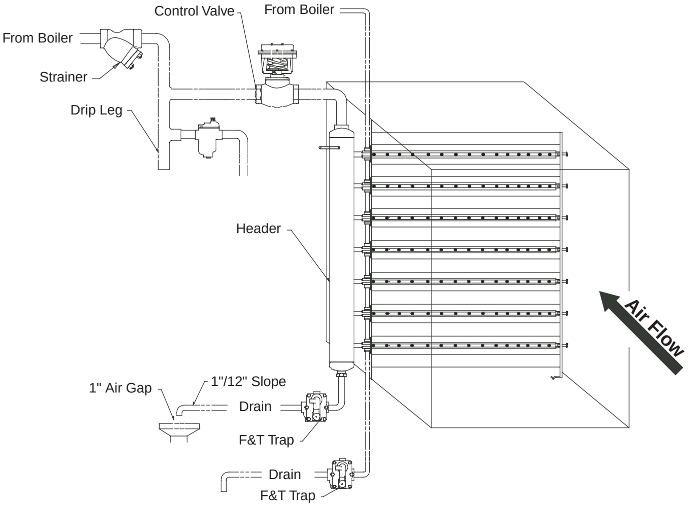

Non-wetting Distance Considerations

Non-wetting distance is an important issue in the proper design and installation of steam humidification equipment. In the humidification process, steam is discharged from the manifold as a “dry” gas. As it mixes with the cooler duct air, some condensation takes place resulting in water particles becoming entrained in the airstream. After a distance these droplets are dispersed by and absorbed into the airstream. Until they are absorbed, these particles can impinge upon any equipment they contact, adversely affecting its operation or service life.

Many applications can be satisfactorily addressed by using a single manifold with a direct steam injection humidifier (See Figure 87-1) or single dispersion tube with a steam generator (See Figure 87-2). Frequently, however, performance and practicality dictate the use of multiple manifolds or dispersion tubes. These are field assembled (See Figure 87-3).

When non-wetting distance parameters or size limitations do not allow the use of multiple manifolds with Armstrong Series 9000 or 1000 humidifiers or multiple dispersion tubes with Armstrong steam-to-steam or electronic humidifiers, the Armstrong HumidiPack or HumidiPackPlus is used.

Please consult with your Armstrong Representative with questions regarding selection of any of these humidification products.

Armstrong Steam Distribution Options for Air Handling Systems

Figure 87-1.

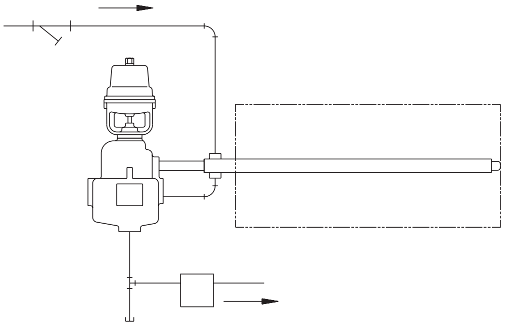

Figure 87-2.

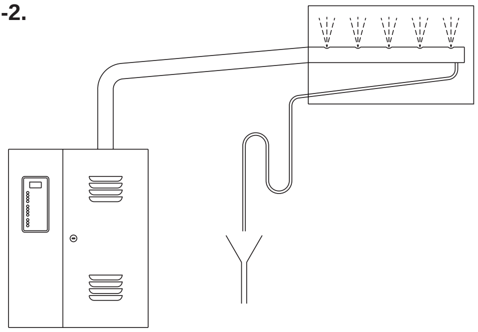

Figure 87-3.

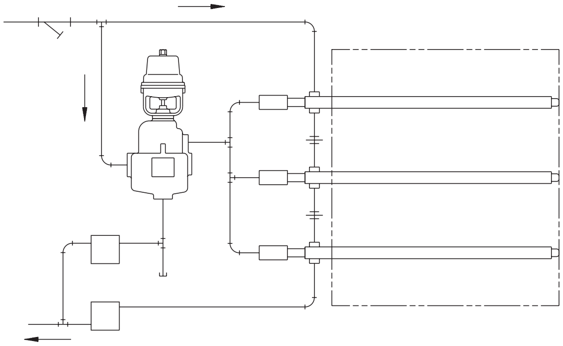

How HumidiPack Shortens Non-wetting Distances

Conditioned steam enters each of the dispersion tubes and flows through steam nozzles (not required on HumidiPackPlus) which extend from the center of each tube, before discharging through orifices into the airstream.

Air flow approaching the HumidiPack first encounters baffle tubes (See Figure 87-4) which influence its flow pattern and increase its velocity. Air traveling around each set of baffle tubes encounters an opposing flow of steam exiting the orifices. The result is more uniform distribution and faster absorption of moisture into the air, resulting in shorter non-wetting distances than experienced with traditional manifolds or dispersion tubes.

Figure 87-4. Mixing of Air and Steam (HumidiPack shown)

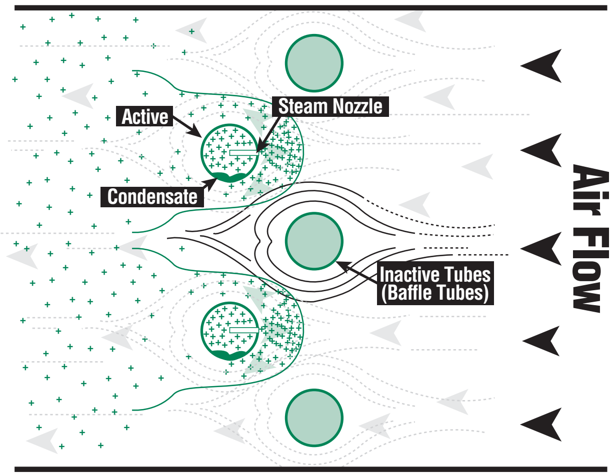

HumidiPack® and HumidiPackPlus® Capacities

Note: Maximum operating pressure is 60 psig saturated steam. Consult factory if velocities below 375 FPM. (See Page 100 for Metric Capacities) HumidiPack, HumidiPack CF and HumidiPackPlus are customized to meet specific applications requirements. A customized unit may not necessarily be able to provide the capacities published in these tables.

Table 88-1. Capacities (lb/hr) For 375-500 FPM Velocity - Series R and Series P (Low Velocity)

	Active Tube Length (inches)																						
Header	**12**	**18**	**24**	**30**	**36**	**42**	**48**	**54**	**60**	**66**	**72**	**78**	**84**	**90**	**96**	**102**	**108**	**114**	**120**	**126**	**132**	**138**	**144**
12	20	30	40	50	60	70	80	90	100	110	120	130	140	150	160	170	180	190	200	210	220	230	240
18	20	30	40	50	60	70	80	90	100	110	120	130	140	150	160	170	180	190	200	210	220	230	240
24	30	45	60	75	90	105	120	135	150	165	180	195	210	225	240	255	270	285	300	315	330	345	360
30	40	60	80	100	120	140	160	180	200	220	240	260	280	300	320	340	360	380	400	420	440	460	480
36	50	75	100	125	150	175	200	225	250	275	300	325	350	375	400	425	450	475	500	525	550	575	600
42	60	90	120	150	180	210	240	270	300	330	360	390	420	450	480	510	540	570	600	630	660	690	720
48	70	105	140	175	210	245	280	315	350	385	420	455	490	525	560	595	630	665	700	735	770	805	840
54	80	120	160	200	240	280	320	360	400	440	480	520	560	600	640	680	720	760	800	840	880	920	960
60	90	135	180	225	270	315	360	405	450	495	540	585	630	675	720	765	810	855	900	945	990	1035	1080
66	100	150	200	250	300	350	400	450	500	550	600	650	700	750	800	850	900	950	1000	1050	1100	1150	1200
72	110	165	220	275	330	385	440	495	550	605	660	715	770	825	880	935	990	1045	1100	1155	1210	1265	1320

Note: Use of Series R is limited to duct widths of 36".

Table 88-2. Capacities (lb/hr) For 501-1000 FPM Velocity - Series R and Series P (Medium Velocity)

	Active Tube Length (inches)																						
Header	**12**	**18**	**24**	**30**	**36**	**42**	**48**	**54**	**60**	**66**	**72**	**78**	**84**	**90**	**96**	**102**	**108**	**114**	**120**	**126**	**132**	**138**	**144**
12	30	45	60	75	90	105	120	135	150	165	180	195	210	225	240	255	270	285	300	315	330	345	360
18	30	45	60	75	90	105	120	135	150	165	180	195	210	225	240	255	270	285	300	315	330	345	360
24	45	67	90	112	135	157	180	202	225	247	270	292	315	337	360	382	405	427	450	472	495	517	540
30	60	90	120	150	180	210	240	270	300	330	360	390	420	450	480	510	540	570	600	630	660	690	720
36	75	112	150	187	225	262	300	337	375	412	450	487	525	562	600	637	675	712	750	787	825	862	900
42	90	135	180	225	270	315	360	405	450	495	540	585	630	675	720	765	810	855	900	945	990	1035	1080
48	105	157	210	262	315	367	420	472	525	577	630	682	735	787	840	892	945	997	1050	1102	1155	1207	1260
54	120	180	240	300	360	420	480	540	600	660	720	780	840	900	960	1020	1080	1140	1200	1260	1320	1380	1440
60	135	202	270	337	405	472	540	607	675	742	810	877	945	1012	1080	1147	1215	1282	1350	1417	1485	1552	1619
66	150	225	300	375	450	525	600	675	750	825	900	975	1050	1125	1200	1275	1350	1425	1500	1575	1650	1725	1800
72	165	247	330	412	495	577	660	742	825	907	990	1072	1155	1237	1320	1402	1485	1567	1650	1732	1815	1897	1980

Note: Use of Series R is limited to duct widths of 36".

Table 88-3. Capacities* (lb/hr) For >1000 FPM Velocity - Series P (High Velocity)

	Active Tube Length (inches)																						
Header	**12**	**18**	**24**	**30**	**36**	**42**	**48**	**54**	**60**	**66**	**72**	**78**	**84**	**90**	**96**	**102**	**108**	**114**	**120**	**126**	**132**	**138**	**144**
12	46	69	92	115	138	161	184	207	230	253	276	299	322	345	368	391	414	437	460	483	506	529	552
18	46	69	92	115	138	161	184	207	230	253	276	299	322	345	368	391	414	437	460	483	506	529	552
24	69	103	138	172	207	241	276	310	345	379	414	448	483	517	552	586	621	655	690	724	759	794	828
30	92	138	184	230	276	322	368	414	460	506	552	598	644	690	736	782	828	874	920	966	1012	1058	1104
36	115	172	230	287	345	402	460	517	575	632	690	747	805	862	920	977	1035	1092	1150	1207	1265	1322	1380
42	138	207	276	345	414	483	552	621	690	759	828	897	966	1035	1104	1173	1242	1311	1380	1449	1518	1587	1656
48	161	241	322	402	482	563	643	724	804	885	965	1046	1127	1207	1288	1368	1449	1529	1610	1690	1771	1851	1932
54	184	276	368	460	552	644	736	828	920	1012	1104	1196	1288	1380	1472	1564	1656	1748	1840	1932	2024	2116	2208
60	207	310	414	517	621	724	828	931	1035	1138	1242	1345	1449	1552	1656	1759	1863	1967	2070	2174	2277	2381	2484
66	230	345	460	575	690	805	920	1035	1150	1265	1380	1495	1610	1725	1840	1955	2070	2185	2300	2415	2530	2645	2760
72	253	379	506	632	759	885	1012	1138	1265	1391	1518	1644	1771	1897	2024	2150	2277	2403	2530	2656	2783	2910	3036

***Note:** HumidiPack capacities may be modified, depending upon the application and design of unit.

The capacity tables indicate that 6' X 12' is the maximum size HumidiPack CF or HumidiPackPlus dispersion assembly. However, HumidiPack and HumidiPackPlus are designed to allow for stacking of fabricated banks or placement side by side for applications of greater size.

For applications with greater capacity requirements than shown for a specific size bank, options include:
1. An expanded duct section to allow for a sufficiently larger HumidiPack matching the capacity requirements.
2. Use of two HumidiPacks in series (where Psychometrics allow) or a primary and booster humidifier arrangement. Reference the Humidification Handbook section of this catalog or contact your Armstrong Representative for assistance.
3. Custom Series A units which are specially designed for each application's needs.
4. Use of Series 9000 direct steam injection humidifiers with an appropriate number of jacketed manifolds.

All dimensions and weights are approximate. Use certified print for exact dimensions. Design and materials are subject to change without notice.

Figure 89-1. Vertical HumidiPack (Left Steam Supply)

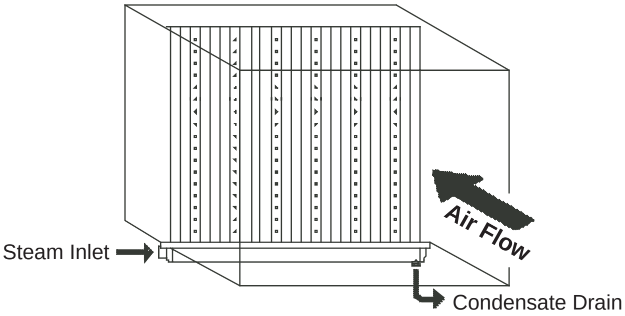

Figure 89-2. Vertical HumidiPack (Right Steam Supply)

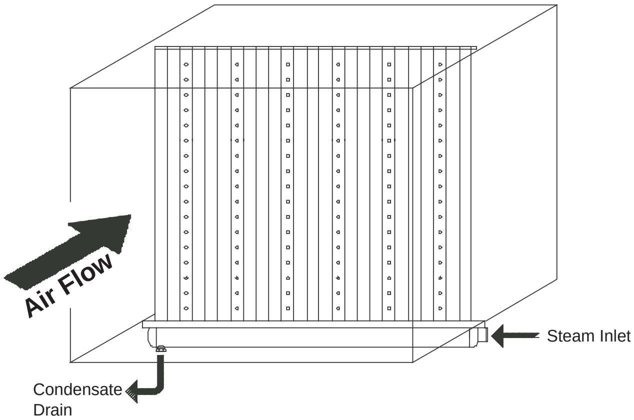

Figure 89-3. Horizontal HumidiPackPlus (Left Steam Supply)

Figure 89-4. Horizontal HumidiPackPlus (Right Steam Supply)

Note: Horizontal HumidiPack and HumidiPack CF orientation similar.

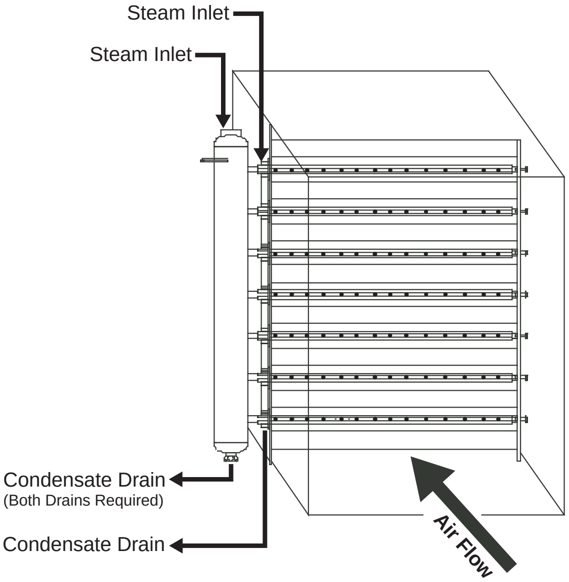

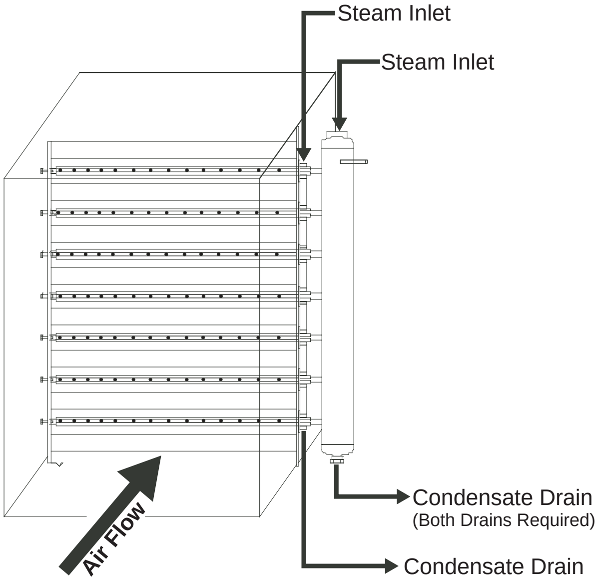

HumidiPack and HumidiPackPlus Selection and Ordering Procedure

If the parameters of your application are outside the ranges for Series R or Series P in terms of capacity, the Series A units may meet your needs. Custom Series A units are specially designed for the needs of specific applications. Please consult your local Armstrong Representative with the requirements of your application.

Steps In Selection

1. Identify the steam capacity required. Please see the Humidification Handbook section of this catalog and Armstrong's Humid-A-ware™ Humidification Sizing and Selection software, or contact your local Armstrong Representative for assistance.

2. After determining the airflow velocity (FPM), consult the appropriate HumidiPack capacity table. (See Page 88 Ensure that HumidiPack Series R or HumidiPackPlus Series P offers sufficient capacity for the specific duct height and width of your application. If not, a custom Series A is required.

3. Verify that the non-wetting distance and air pressure drop are acceptable by contacting your local representative or by downloading Humid-A-ware at www.armstronginternational.com.

How To Order

Information required includes the following:

- Height and width of multiple tube bank
- CFM
- Maximum required steam capacity
- Maximum allowable air pressure drop (if specified)
- Duct air temperature
- Final duct relative humidity
- Non-wetting distance available

Control Valve (If Applicable)

You may size the valve with the information found on Page 92 or Armstrong will size the valve if you supply the following:

- Steam pressure
- Required humidification load
- Specify type of control:
  Pneumatic, Electric, Electronic and Input Signal

HumidiPack Orientation

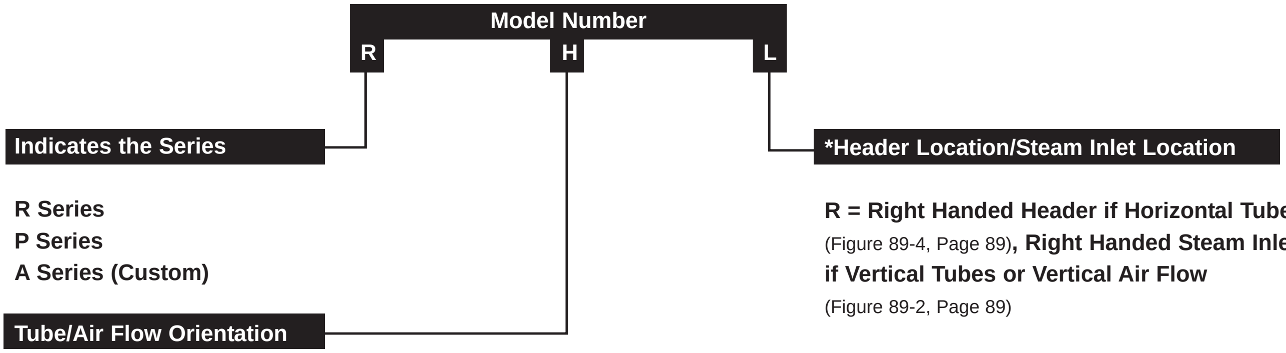

Indicates the Series

R Series
P Series
A Series (Custom)

Tube/Air Flow Orientation

H = Horizontal Tubes/Horizontal Air (Figures 89-3, 89-4, Page 89)
V = Vertical Tubes/Horizontal Air (Figures 89-1, 89-2, Page 89)
D = Horizontal Tubes/Vertical Air Down
U = Horizontal Tubes/Vertical Air Up

***Header Location/Steam Inlet Location**

R = Right Handed Header if Horizontal Tubes (Figure 89-4, Page 89)**, Right Handed Steam Inlet if Vertical Tubes or Vertical Air Flow** (Figure 89-2, Page 89)

L = Left Handed Header if Horizontal Tubes (Figure 89-3, Page 897)**, Left Handed Steam Inlet if Vertical Tubes or Vertical Air Flow** (Figure 89-1, Page 89)

Standard HumidiPack includes (when steam source is plant steam) a strainer and inverted bucket trap for steam supply, control valve, and one header drain trap for the separator/ header. HumidiPackPlus includes an additional trap to drain the dispersion tube jackets.

*For all horizontal air flows, right and left handed orientations are determined with air flow at your back. For all vertical air flows, right and left steam inlet locations are determined by looking at the unit with airflow at your back.

Control Valve Characteristics

HumidPack and HumidiPackPlus are supplied with the Armstrong Series ACV Control Valve for applications when central steam or steam under pressure is available. The valve utilizes our parabolic plug design offering immediate response and precise modulation of flow throughout the 3/4" valve stroke. The parabolic plug also offers high rangeabilities.

Accuracy by Design – Not by Accident

The secret of accurate control is making sure a valve's control characteristics match the application. When they do, the valve controls accurately (without hunting) and performs reliably. When there's no match, the valve simply cannot do what the application demands.

Armstrong uses a modified parabolic plug to handle exceptionally low output. The modification of true linear characteristics provides more precise control when capacity requirements are very low and the valve is just cracked off the seat. Notice in Figure 91-1 that at point A on the curve more than half the valve stroke is devoted to 40% of the unit's capacity. At point B, 1/4 of the stroke is devoted to only 10% of capacity. At point C, 10% of the stroke covers less than 5% of the unit's capacity.

How low can the unit control? Table 91-1, Page 91 tabulates this function, called rangeability. Rangeability is the ratio between the maximum controllable flow and the minimum controllable flow through the valve. The higher the rangeability of a valve, the more accurately it can control flow when low output is required. If rangeability is too low, the valve will "hunt" excessively when low output is required.

To calculate minimum flow, simply multiply Cv by the percentages shown in the table. For example, a 5/16" orifice in an ACV-02 has a Cv of 2.5. The lowest output that can be controlled is 2% of maximum flow.

Figure 91-1. Modified Linear Curve

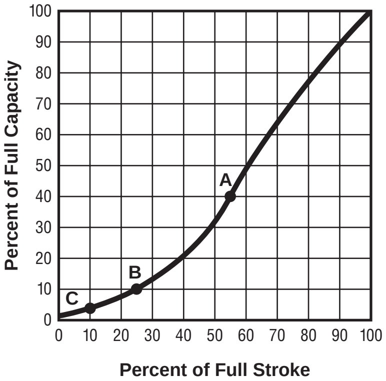

Modified linear characteristics curve for valves used under modulating control. The modification of true linear characteristics provides more precise control when capacity requirements are very low and the valve is just cracked off the seat.

Figure 91-2. Parabolic Plug Type Valves

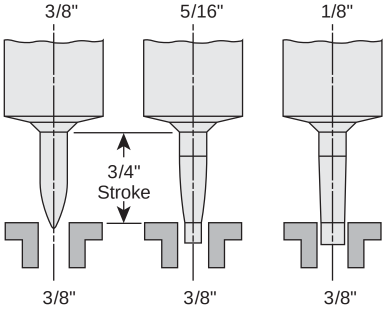

Parabolic plug valve configuration permits accurate modulation of flow over the complete stroke of the valve.

Table 92-1. Control Valve Rangeability (Normally Closed Valves)

Control Valve Model	Valve		Rangeability		Standard Operators													
	Equivalent Diameter		Ratio of Flow Max:Min	Flow Coefficient CV	Armstrong C-1801		Invensys MK4411 & MK4421		Honeywell MP953D		Honeywell MP953F		Belimo NVF24		Honeywell M9182A		Belimo AF24SR	
					Maximum Operating Pressure, psig (bar)													
	in	mm			psig	bar	psig	bar	psig	bar	psig	bar	psig	bar	psig	bar	psig	bar
CV-06	1-1/2	38	63:1	27	N/A		N/A		25	1.7	150	10.3	N/A		100	6.8	100	6.8
	1-1/4	32	69:1	21														
	1-1/8	28	61:1	19.5														
	1	25	53:1	18					30	2.1					125	8.6	125	8.6
	7/8	22	44:1	16														
	3/4	20	33:1	13														
CV-04	1	25	53:1	13	N/A		N/A		70	4.8	150	10.3	60	4.1	150	10.3	150	10.3
	3/4	20	33:1	10.5														
	5/8	16	25:1	8.5														
	9/16	14	105:1	7														
	1/2	15	97:1	6														
	7/16	11	75:1	5														
CV-03	3/4	20	118:1	7.5	80	5.5	80	5.5	80	5.5	150	10.3	60	4.1	150	10.3	150	10.3
	5/8	16	123:1	6.5														
	9/16	14	105:1	6														
	1/2	15	97:1	5.5	150	10.3	150	10.3	150	10.3								
	7/16	11	75:1	4														
CV-02	1/2	15	97:1	4	150	10.3	150	10.3	150	10.3	150	10.3	60	4.1	150	10.3	150	10.3
	7/16	11	75:1	3.5														
	3/8	10	70:1	3														
	5/16	8	49:1	2.5														
	1/4	6	31:1	1.7														
	3/16	5	18:1	0.9														
	1/8	3	37:1	0.45														
	1/16	1.5	10:1	0.09														

Table 92-2. Selection Formulas

For Steam	Formula Key
For Water: $GPM = \frac{C_v \text{ x } \sqrt{\Delta P}}{\sqrt{G}}$ **For Steam:** When $P_2 > \frac{P_1}{2}$ $W = 3 \text{ x } C_v \text{ x } \sqrt{\Delta P \text{ x } P_2}$ When $P_2 \leq \frac{P_1}{2}$ $W = 1.5 \text{ x } C_v \text{ x } P_1$	C_V = Valve flow coefficient G = Specific gravity GPM = Maximum flow capacity of liquid GPM P_1 = Inlet pressure, psia (psig + 14.7) P_2 = Outlet pressure, psia (psig + 14.7) ^{3}P = Pressure drop (P1 - P2) psi W = Maximum flow capacity of steam, lb/hr

All dimensions and weights are approximate. Use certified print for exact dimensions. Design and materials are subject to change without notice.

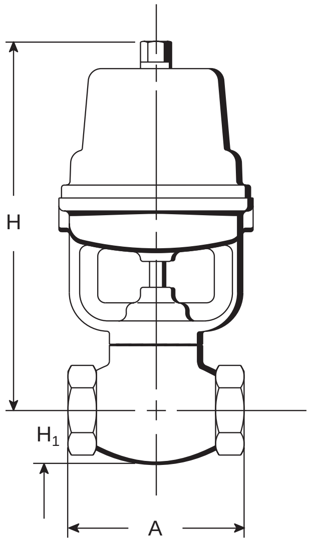

Table 93-1. Specifications

Dimensions and Weights

Model Number	Pipe Size		Body Material	Trim Material	Vessel Design Limitation	Minimum ^{3}P	A		H$_1$		Weight	
	in	mm					in	mm	in	mm	lb	kg
Control Valve												
ACV-02	1/2	15	Cast Iron	300 Series Stainless Steel	250 psig @ 400°F 17 bar @ 204°C	2psi (.14 bar)	4-1/8	105	1-1/8	29	9-3/4	4.4
ACV-03	3/4	20					4-1/4	108	1-5/16	33	10-1/2	4.8
ACV-04	1	25					5-1/2	140	1-7/8	48	11-3/4	5.3
ACV-06	1-1/2	40					8	203	2-7/16	62	22	10
ECV-02	1/2	15	T-316 Stainless Steel		400 psig @ 400°F 27.5 bar @ 204°C		4-1/8	105	1-1/8	29	8-1/2	3.9
ECV-03	3/4	20					4-1/4	108	1-5/16	33	9-1/2	4.3

Table 93-2. Physical Data "H" Dimension

Model Number	Armstrong C-1801		Honeywell MP953D		Honeywell MP953F		Invensys MK4411 & MK4421		Honeywell M9182A		Belimo AF24SR		Belimo NVF24-MFT-US E	
	in	mm	in	mm	in	mm	in	mm	in	mm	in	mm	in	mm
ACV/ECV-02	8-1/2	216	7	178	11-7/8	302	11-1/2	292	11-5/8	295	15-3/16	386	11-5/8	295
ACV/ECV-03	8-7/8	225	7-3/8	187	12-1/4	311	11-7/8	302	11-13/16	300	15-9/16	395	12	305
ACV-04	—		7-3/8	187	12-3/4	324	12-3/8	314	12-3/8	314	16-3/16	411	12-1/2	318
ACV-06	—		9	229	13-7/8	352	13-1/2	343	12-15/16	329	17-5/16	440	13-5/8	346

How to Order

Body Material
A = Cast Iron
E = T-316 Stainless Steel

Product Line
CV = Control Valve

Connection Size
02 = 1/2"
03 = 3/4"
04 = 1"
06 = 1-1/2"

Standard Operator Types
Pneumatic Modulating
AM = Armstrong C-1801
HAM = Honeywell MP953D and F
INAM = INVENSYS MK4411 or 4421

Electric Modulating
HEM = Honeywell M9182A
BLEM = Belimo AF24SR
BNVEM = Belimo NVF24-MFT-US-E

All dimensions and weights are approximate. Use certified print for exact dimensions. Design and materials are subject to change without notice.

Armstrong® HumidiPack Dimensional Drawings and Physical Data

Table 94-1. Physical Data

	in.	Min. in.	Max. in.	mm	Min. mm	Max. mm
Horizontal HumidiPack - See Figure 94-1						
A	—	12	72	—	305	1829
B	—	12	36	—	305	914
C	8-1/2	—	—	216	—	—
D	5	—	—	127	—	—
E	—	17	41	—	432	1041
F	6-1/8	—	—	158	—	—
Vertical HumidiPack - See Figure 94-2						
	in.	Min. in.	Max. in.	mm	Min. mm	Max. mm
A	—	12	72	—	305	1829
B	—	12	72	—	305	1829
C	8-1/2	—	—	216	—	—
D	5	—	—	127	—	—
E	—	17	77	—	432	1956
F	6-1/8	—	—	158	—	—

Table 94-2. List of Materials

Fabricated Separator/Header and Multiple Tube Dispersion Assembly	Stainless Steel*
Mounting Frame (Optional)	Carbon Steel
Air Side Gaskets	ASTM D-2000-90

*Armstrong reserves the right to supply non-wetted parts of aluminized steel.

Suggested Specification for HumidiPack

Armstrong HumidiPack shall be a packaged steam injection type humidifier or multiple tube dispersion assembly ready for insertion into the duct.

HumidiPack includes a fabricated separator/header and multiple dispersion tube design of all stainless steel construction wetted parts; No o-rings or slip couplings are required. Each active tube is fitted with a series of nozzles which extend from the center of the tube. The nozzles are sized and spaced to accept steam from the separator/header and provide a dry and uniform discharge of steam.

Each HumidiPack segment is designed for simplified duct mounting including stacking of header/separator/dispersion tube segments when necessary.

HumidiPack includes (when appropriate) a steam supply control valve utilizing a parabolic plug design offering immediate response and precise modulation of flow throughout the 3/4" valve stroke. The control valve is protected by a steam supply strainer and inverted bucket drip trap. A float type drip trap will be used to drain the separator/header. For application with horizontal dispersion tubes, all piping is on one side of the duct or air handling unit.

The packaged humidifier shall provide a non-wetting distance of no more than ___" downstream of the active tube segment while maintaining conditions of ___% relative humidity at a minimum temperature of ___ °F in the duct airstream. Air pressure drop across dispersion tube segment shall not exceed ___" W.C. at a duct air velocity of ___ FPM.

Figure 94-1. Horizontal HumidiPack

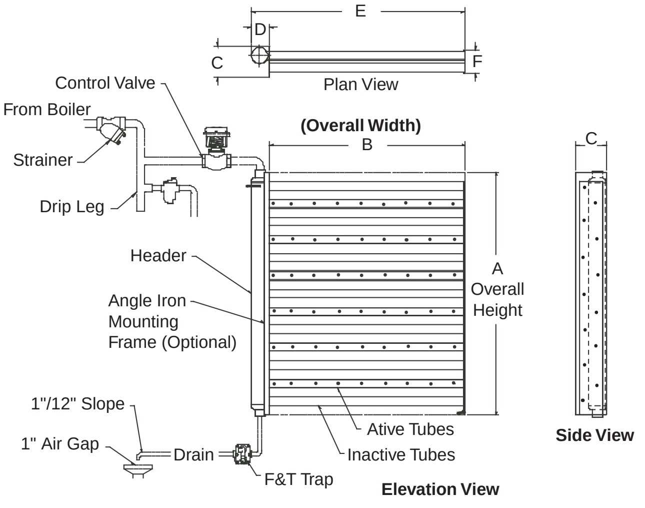

Figure 94-2. Vertical HumidiPack

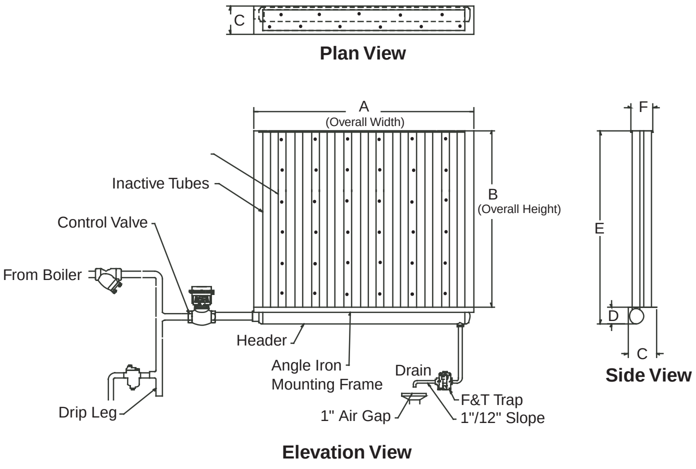

All dimensions and weights are approximate. Use certified print for exact dimensions. Design and materials are subject to change without notice.

Table 95-1. Physical Data

Horizontal HumidiPack CF - See Figure 95-1

	in.	Min. in.	Max. in.	mm	Min. mm	Max. mm
A	—	12	72	—	305	1829
B	—	12	144	—	305	3658
C	8-1/2	—	—	216	—	—
D	—	5	7-7/8	—	127	200
E	—	17	151	—	432	3835
F	6-1/8	—	—	158	—	—

Table 95-2. List of Materials

Fabricated Separator/Header and Multiple Tube Dispersion Assembly	Stainless Steel*
Mounting Frame (Optional)	Carbon Steel
Air Side Gaskets	ASTM D-2000-90

*Armstrong reserves the right to supply non-wetted parts of aluminized steel.

Figure 95-1. Horizontal HumidiPack CF

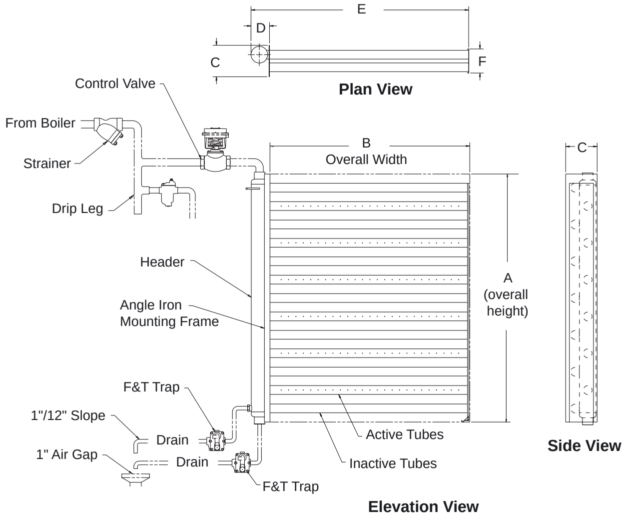

Suggested Specification for HumidiPack CF

Armstrong HumidiPack CF shall be a packaged steam injection type humidifier or multiple tube dispersion assembly ready for insertion into the duct or mounting in an air handling unit.

HumidiPack CF includes a vertical pipe within a pipe fabricated separator/header and multiple dispersion tube design of all stainless steel construction.

Active dispersion tubes are pre-heated with an internal pipe carrying steam to the far end of the dispersion tube. Steam is then allowed to travel thru an oversized dispersion tube allowing maximum separation of steam from condensate prior to discharge through a series of dispersion nozzles that extend into the center of the tube.

Each active tube is fitted with a series of plastic nozzles, which extend into the center of the tube. The nozzles are sized and spaced to accept steam from the separator/header and provide a dry and uniform discharge of steam.

During periods of no demand, the entire tube bank assembly will be cold, providing no additional heat transferred into the active air flow.

Complete dispersion panel assembly must be all welded construction. O-rings or slip fit couplings are not acceptable as O-rings add another level of required annual maintenance.

Each humidipack CF segment is designed for simplified duct mounting including stacking of header/separator/dispersion tube segments when necessary.

HumidiPack CF includes a steam supply control valve utilizing a parabolic plug design offering immediate response and precise modulation of flow throughout the 3/4” valve stroke. The control valve is protected by a steam supply strainer and inverted bucket drip trap.

Two float type drip trap will be used to drain the separator/header.

All connected piping is to be on one side of the duct or air handling unit.

All dimensions and weights are approximate. Use certified print for exact dimensions. Design and materials are subject to change without notice.

HumidiPackPlus Dimensional Drawings and Physical Data

Table 96-1. Physical Data

	in.	Min. in.	Max. in.	mm	Min. mm	Max. mm
Horizontal HumidiPack Plus - See Figure 94-1						
A	—	12	72	—	305	1829
B	—	12	144	—	305	3658
C	8-1/2	—	—	216	—	—
D	—	5	7-7/8	—	127	200
E	—	17	149	—	432	3835
F	6-1/8	—	—	158	—	—
Vertical HumidiPack Plus - See Figure 96-2						
	in.	**Min. in.**	**Max. in.**	**mm**	**Min. mm**	**Max. mm**
A	—	12	72	—	305	1829
B	—	12	144	—	305	3658
C	8-1/2	—	—	216	—	—
D	—	5	7-7/8	—	127	200
E	—	17	151	—	432	3835
F	6-1/8	—	—	158	—	—

Table 96-2. List of Materials

Fabricated Separator/Header and Multiple Tube Dispersion Assembly	Stainless Steel*
Mounting Frame (Optional)	Carbon Steel
Air Side Gaskets	ASTM D-2000-90

*Armstrong reserves the right to supply non-wetted parts of aluminized steel.

Suggested Specification for HumidiPackPlus

Armstrong HumidiPackPlus shall be a packaged steam injection type humidifier assembly ready for insertion into the duct.

HumidiPackPlus includes a fabricated separator/header and multiple steam jacketed dispersion tube design of stainless steel wetted parts. No O-rings or slip couplings are required. Discharge orifices are sized and spaced to accept steam from the separator/header and provide a dry and uniform discharge of steam.

Each HumidiPackPlus segment is designed for simplified duct mounting including stacking of header/separator/dispersion tube segments when necessary.

HumidiPackPlus includes a steam supply control valve utilizing a parabolic plug design offering immediate response and precise modulation of flow throughout the 3/4" valve stroke. The control valve is protected by a steam supply strainer and inverted bucket drip trap. A float type drip trap will be used to drain the separator/header and a second trap will drain the dispersion tube jackets.

For application with horizontal dispersion tubes, all piping is on one side of the duct or air handling unit.

The packaged humidifier shall provide a non-wetting distance of no more than ___" downstream of the active tube segment while maintaining conditions of ___% relative humidity at a minimum temperature of ___ °F in the duct airstream. Air pressure drop across dispersion tube segment shall not exceed ___" W.C. at a duct air velocity of ___ FPM.

Figure 96-1. Horizontal HumidiPackPlus

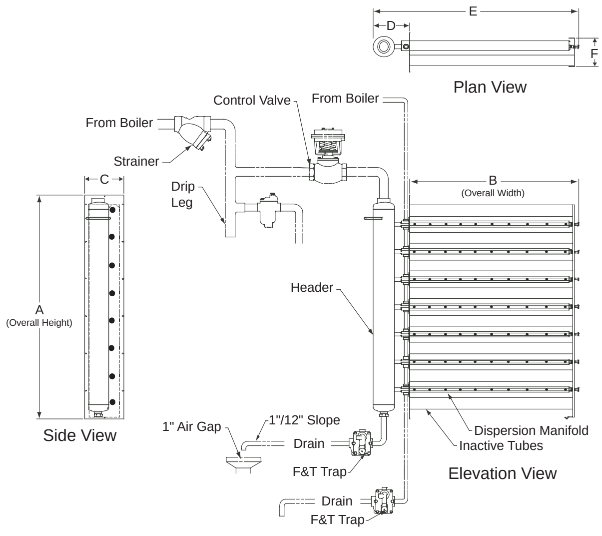

Figure 96-2. Vertical HumidiPackPlus

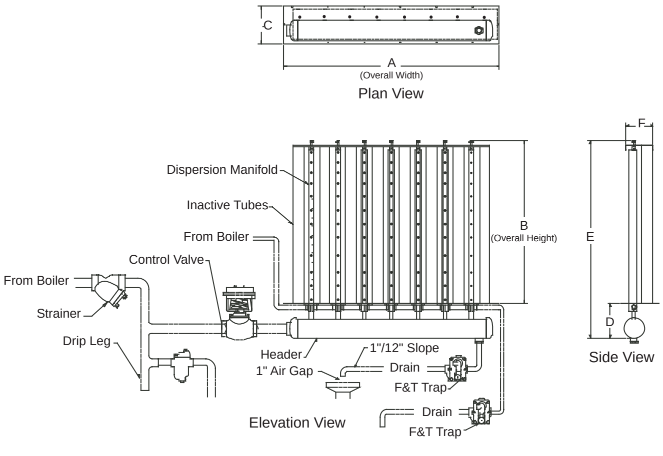

Typical Duct Installations

See Installation Bulletin No. 560 for detailed information. Shown below is HumidiPack. Orientation of HumidiPackPlus in duct is similar.

Figure 97-1. Horizontal Unit Left Handed Header

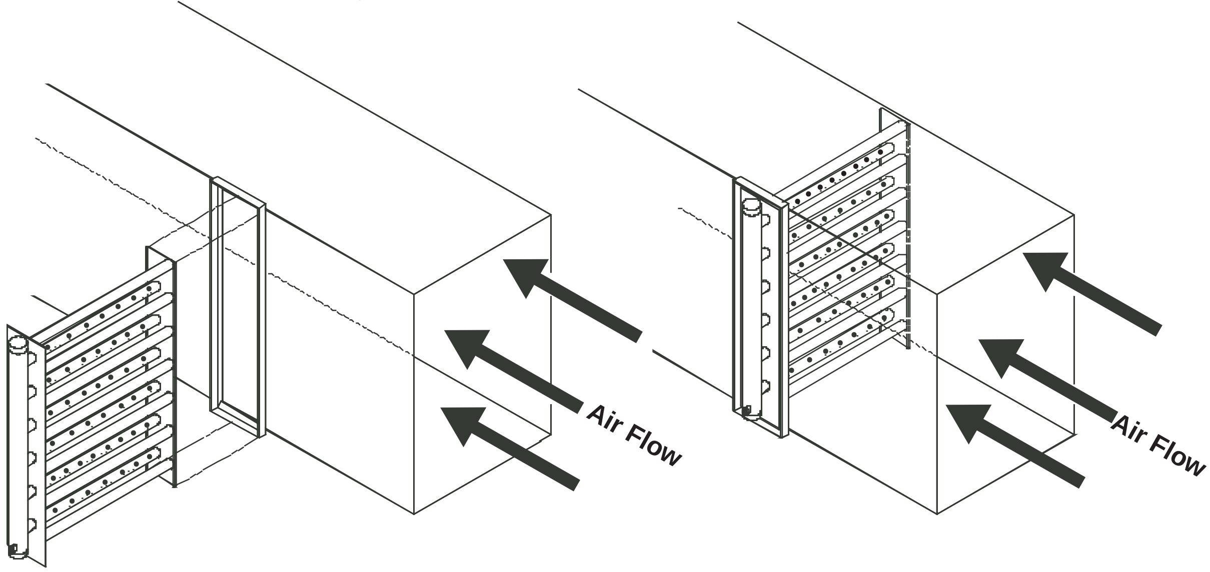

Table 97-1. Recommended Steam Main and Branch Line Drip Leg Sizing

Steam Main Size		Drip Leg Diameter		Drip Leg Length Minimum			
				Supervised Warm-Up		Automatic Warm-Up	
in	mm	in	mm	in	mm	in	mm
1/2	12	1/2	12	10	254	28	711
3/4	19	3/4	19	10	254	28	711
1	25	1	25	10	254	28	711
2	50	2	50	10	254	28	711
3	76	3	76	10	254	28	711
4	101	4	101	10	254	28	711
6	152	4	101	10	254	28	711
8	203	4	101	12	304	28	711
10	254	6	152	15	381	28	711
12	304	6	152	18	457	28	711
14	355	8	203	21	533	28	711
16	406	8	203	24	609	28	711
18	457	10	254	27	685	28	711
20	508	10	254	30	762	30	762
24	609	12	304	36	914	36	914

Figure 97-2. Vertical Unit Left Handed Steam Inlet

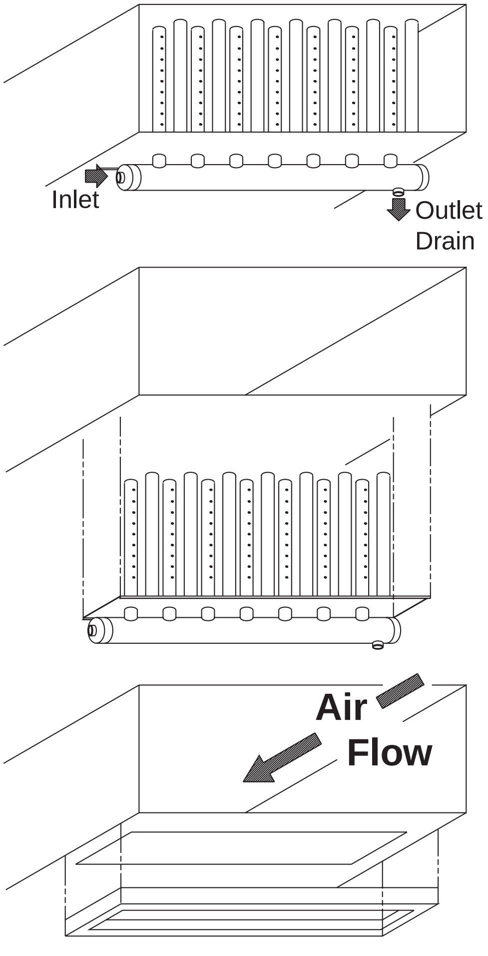

Figure 98-1. Typical runout less than 30 feet (9 meters) long.

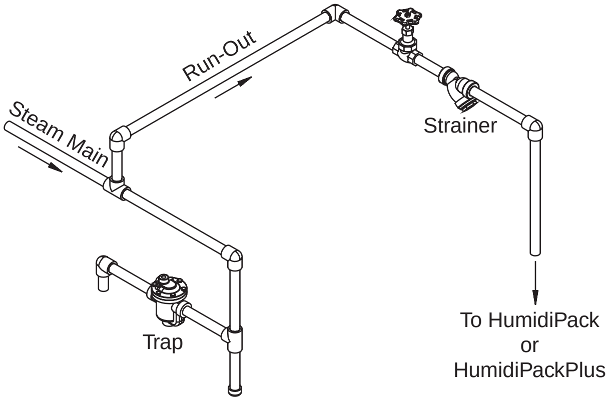

Figure 98-2. Typical long runout of 30 feet (9 meter) or more.

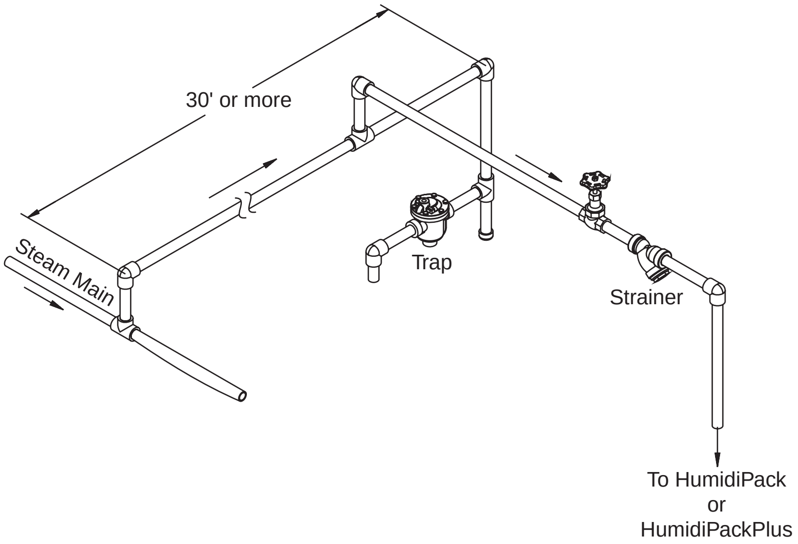

Figure 98-3. If the supply steam to the control valve exceeds the control valve pressure rating, an Armstrong pressure reducing valve may need to be installed after the Y-Type strainer as shown.

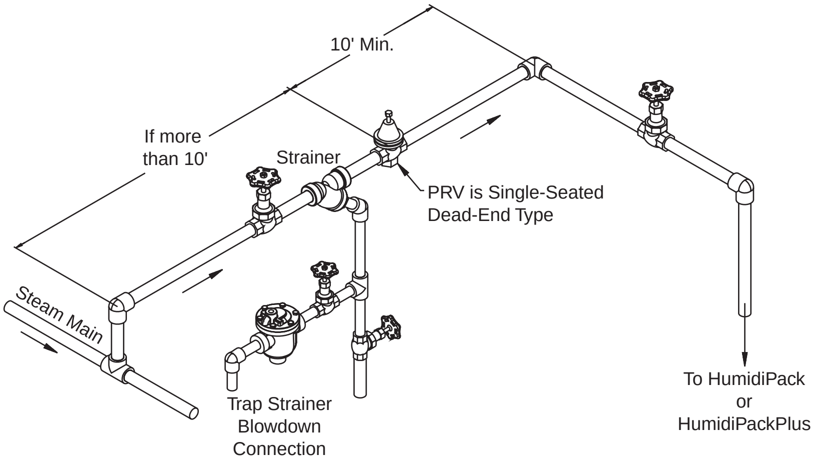

Condensate Drainage Options

Condensate discharged from the HumidiPack or HumidiPackPlus separator/header is at essentially atmospheric pressure. Thus the condensate must be discharged to a drain or pumped. If condensate needs to be discharged at a lower temperature due to local codes a condensate cooler should be used. On many applications, an attempt to lift condensate even a few inches will lead to potential flooding or spitting problems from the multiple tube bank.

Figure 99-1. Header drain trap discharging to pumped return. (HumidiPack shown)

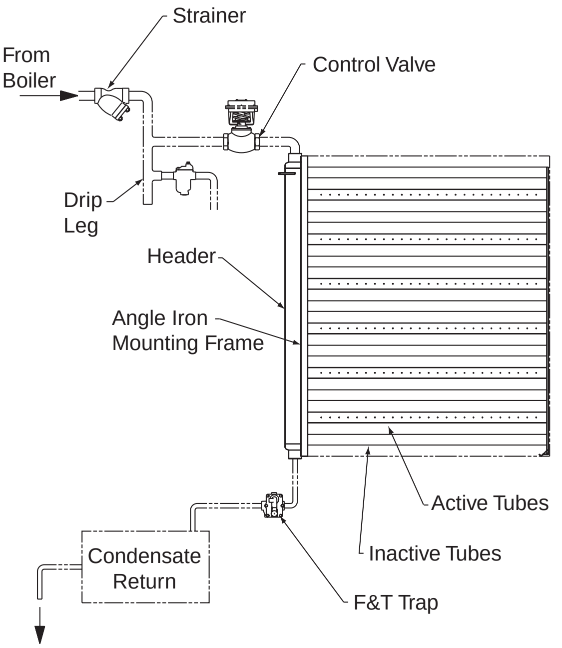

Figure 99-2. Drain trap discharging to floor drain. (HumidiPackPlus shown)

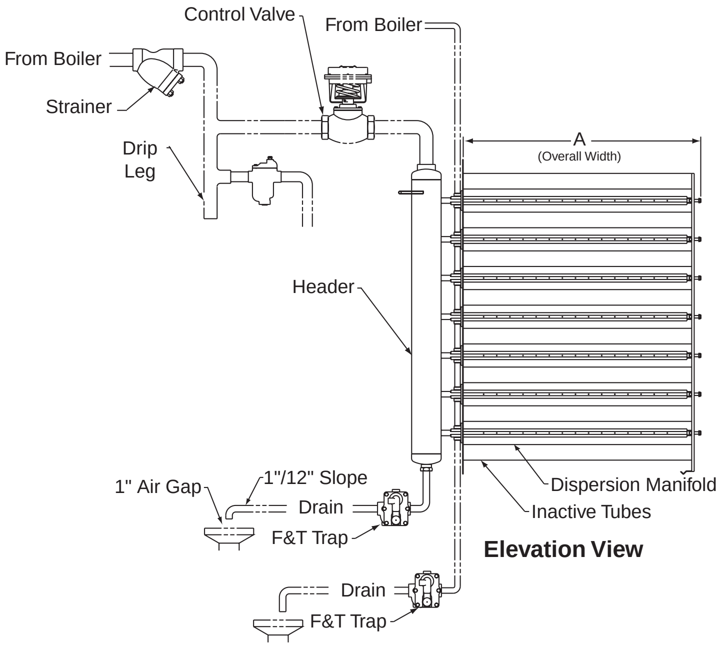

Figure 99-3. Horizontal HumidiPack CF

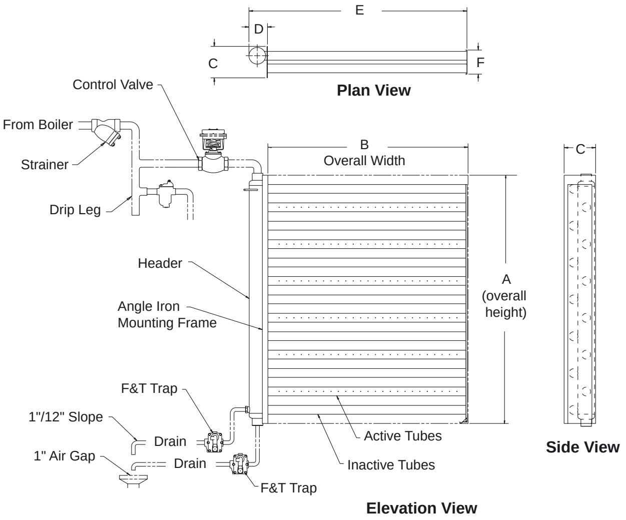

Figure 99-4. Condensate drained through piping loop seal with steam supplied from electric humidifier.

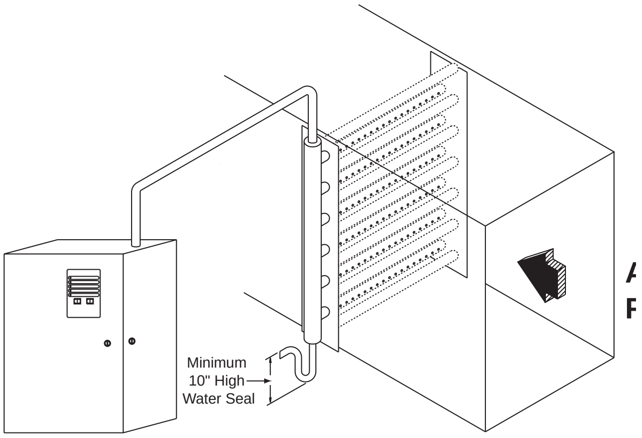

Armstrong® Metric Capacities

Note: **Maximum operating pressure is 4 bar saturated steam. Consult factory if velocities are below 2 M/S.**

Table M88-1. Capacities (kg/hr) For 2-2.54 M/S Velocity - Series R and Series P (Low Velocity)

	Active Tube Length (cm)																					
Header	**30**	**46**	**61**	**76**	**91**	**107**	**122**	**137**	**152**	**168**	**183**	**198**	**213**	**229**	**244**	**259**	**274**	**290**	**305**	**320**	**335**	**351**	**366**
30	9.	14	18	23	27	32	36	41	45	50	54	59	63	68	73	77	82	86	91	95	100	104	109
46	9	14	18	23	27	32	36	41	45	50	54	59	63	68	73	77	82	86	91	95	100	104	109
61	14	20	27	34	41	48	54	61	68	75	82	88	95	102	109	116	122	129	136	143	150	156	163
76	18	27	36	45	54	63	73	82	91	100	109	118	127	136	145	154	163	172	181	190	200	209	218
91	23	34	45	57	68	79	91	102	113	125	136	147	159	170	181	193	204	215	227	238	249	261	272
107	27	41	54	68	82	95	109	122	136	150	163	177	190	204	218	231	245	259	272	286	299	313	327
122	32	48	63	79	95	111	127	143	159	175	190	206	222	238	254	270	286	302	317	333	349	365	381
137	36	54	73	91	109	127	145	163	181	200	218	236	254	272	290	308	327	345	363	381	399	417	435
152	41	61	82	102	122	143	163	184	204	224	245	265	286	306	327	347	367	388	408	429	449	469	490
168	45	68	91	113	136	159	181	204	227	249	272	295	317	340	363	385	408	431	454	476	499	522	544
183	50	75	100	125	150	175	200	224	249	274	299	324	349	374	399	424	449	474	499	524	549	574	599

Note: Use of Series R is limited to duct widths of 91 cm.

Table M88-2. Capacities (kg/hr) For 2.55-5 M/S Velocity - Series R and Series P (Medium Velocity)

	Active Tube Length (cm)																					
Header	**30**	**46**	**61**	**76**	**91**	**107**	**122**	**137**	**152**	**168**	**183**	**198**	**213**	**229**	**244**	**259**	**274**	**290**	**305**	**320**	**335**	**351**	**366**
30	14	20	27	34	41	48	54	61	68	75	82	88	95	102	109	116	122	129	136	143	150	156	163
46	14	20	27	34	41	48	54	61	68	75	82	88	95	102	109	116	122	129	136	143	150	156	163
61	20	30	41	51	61	71	82	92	102	112	122	132	143	153	163	173	184	194	204	214	224	234	245
76	27	41	54	68	82	95	109	122	136	150	163	177	190	204	218	231	245	259	272	286	299	313	327
91	34	51	68	85	102	119	136	153	170	187	204	221	238	255	272	289	306	323	340	357	374	391	408
107	41	61	82	102	122	143	163	184	204	224	245	265	286	306	327	347	367	388	408	429	449	469	490
122	48	71	95	119	143	166	190	214	238	262	286	309	333	357	381	405	429	452	476	500	524	547	571
137	54	82	109	136	163	190	218	245	272	299	327	354	381	408	435	463	490	517	544	571	599	625	653
152	61	92	122	153	184	214	245	275	306	337	367	398	429	459	490	520	551	581	612	641	673	704	734
168	68	102	136	170	204	238	272	306	340	374	408	442	476	510	544	578	612	646	680	714	748	782	816
183	75	112	150	187	224	262	299	337	374	411	449	486	524	561	598	636	673	711	748	785	823	860	898

Note: Use of Series R is limited to duct widths of 91 cm.

Table M88-3. Capacities* (kg/hr) For >5 M/S Velocity - Series P (High Velocity)

	Active Tube Length (cm)																					
Header	**30**	**46**	**61**	**76**	**91**	**107**	**122**	**137**	**152**	**168**	**183**	**198**	**213**	**229**	**244**	**259**	**274**	**290**	**305**	**320**	**335**	**351**	**366**
30	21	31	42	52	63	73	83	94	104	115	125	136	146	156	167	177	188	198	209	219	229	240	250
46	21	31	42	52	63	73	83	94	104	115	125	136	146	156	167	177	188	198	209	219	229	240	250
61	31	47	63	78	94	109	125	141	156	172	188	203	219	234	250	266	282	297	313	328	344	360	376
76	42	63	83	104	125	146	167	188	209	229	250	271	292	313	334	355	376	396	417	438	459	480	501
91	52	78	104	130	156	182	209	234	261	287	313	339	365	391	417	443	469	495	522	547	574	600	626
107	63	94	125	156	188	219	250	282	313	344	376	407	438	469	501	532	563	595	626	657	688	720	751
122	73	109	146	182	219	255	292	328	365	401	438	474	511	547	584	620	657	693	730	766	803	839	876
137	83	125	167	209	250	292	334	376	417	459	501	542	584	626	668	709	751	793	834	876	918	960	1,001
152	94	141	188	234	282	328	376	422	469	516	563	610	657	704	751	798	845	892	939	989	1,033	1,080	1,127
168	104	156	209	261	313	365	417	469	522	574	626	678	730	782	834	887	939	991	1,043	1,095	1,147	1,200	1,252
183	115	172	229	287	344	401	459	516	574	631	688	746	803	860	918	975	1,033	1,090	1,147	1,205	1,262	1,320	1,377

***Note:** HumidiPack capacities may be modified, depending upon the application and design of unit.
The capacity tables indicate that 183 x 366 cm is the maximum size HumidiPack or HumidiPackPlus dispersion assembly. However, HumidiPack and HumidiPackPlus are designed to allow for stacking of fabricated banks or placement side by side for applications of greater size.

All dimensions and weights are approximate. Use certified print for exact dimensions. Design and materials are subject to change without notice.

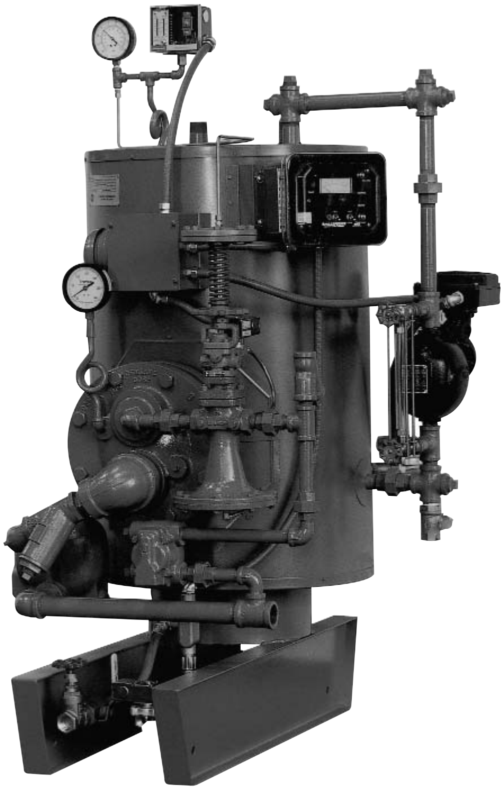

Armstrong Unfired Steam Generators are designed to produce pressurized clean steam using boiler steam or high temperature hot water as an energy source. Typical uses for this clean steam include humidification, sterilization, pharmaceutical applications and food processing.

Armstrong Unfired Steam Generators are constructed and stamped in accordance with ASME code and bear the UB stamp as required by the ASME code. All tanks are registered with the National Board of Boiler and Pressure Vessel Inspectors and an insurance compliance certificate is furnished. Unfired steam generators that generate 50 psi or greater steam will be 100% x-rayed in accordance with the ASME code.

Armstrong Unfired Steam Generators are carefully designed to provide the correct balance of steaming area, coil size and control components to meet the specified requirements.

Armstrong Unfired Steam Generators include an over pressure safety system that will shut the unit down on loss of electrical power. This over pressure safety system closes both the feedwater and source steam valves shutting the Unfired Steam Generator off.

Basic USG Package Includes:

- ASME Code constructed and National Board Registered Vessel
- 2 inch fiberglass insulation
- 20 gauge steel jacket with hammerstone enamel paint
- Structural I-beam support skid base
- ASME pressure relief valve
- Boiler steam pressure gauge
- Steam separator
- Steam traps - main and auxiliary
- Steam strainer - main
- Steam pressure control valve
- Built In:
    - -Remote start stop
    - -On-off switch
    - -Alarm horn with alarm silence relay
    - -Low water cut-off
    - -Timer for timed blow down
    - -Relay for water feed
    - -Operating pressure readout
    - -High pressure cut-out and alarm
    - -Low pressure alarm
    - -LCD display of functions and alarms
        - -Power on
        - -Low water
        - -High water
        - -Water feed
        - -High pressure
        - -Low pressure
        - -Blow down operating
    - -Built in contacts to notify BMS of functions and alarms:
        - -Power on
        - -Low water
        - -High water
        - -Water feed
        - -High pressure
        - -Low pressure
        - -Blow down operating
        - -Operating pressure

Materials of Construction

Armstrong Unfired Steam Generators

Output steam pressure is maintained by a modulating source steam valve, which monitors the output steam pressure and varies the input of source steam to maintain a constant output steam pressure. Two types of steam controllers are available.

Pilot Operated

A pilot operated steam controller which uses a steam pilot to monitor output steam pressure and automatically modulate the flow of source steam and maintain a constant output steam pressure. A pilot operated controller is field adjustable.

Pneumatically Operated

A pneumatically operated steam controller uses building air which is connected to a furnished transmitter which monitors the output steam pressure and sends a varying air signal to the source steam controller to modulate the flow of source steam and maintain a constant output steam pressure. A 15 psi minimum air signal is required. Pneumatic set point is field adjustable.

Armstrong Unfired Steam Generators are completely packaged and ready for use. All components are sized, mounted and piped prior to shipment. When supplied with optional equipment for make-up water feeding, these reboilers come complete and require only connections to services. See “Optional Extras”.

Shell

All stainless steel grades furnished are typically T-304 or T-316 as required for the application. In a stainless steel Unfired Steam Generator, all components in contact with clean steam can be constructed of the grade of stainless steel specified.

Submerged Coils

All stainless steel U-bend heating coil rolled into a stainless steel tube sheet.

Piping

All Stainless steel piping on clean steam side

High Pressure Cut Off

Armstrong Unfired Steam Generators are furnished with a high pressure cut off of energy source via solenoid on pilot or incoming air signal. This safety system is designed to prevent the unfired steam generator from generating steam above the desired set point. This solenoid is also wired to the level controller to close the control valve on a low water condition.

Steam Generators with carbon steel shells and copper heat exchangers are available for applications not using ultra-pure feed water. Consult Factory.

Optional Extras

Make-up Water Feeding

Make-up water must be furnished to the unfired steam generator.

This can be accomplished by a simple solenoid valve, which opens and closes on a signal from the water level controller. A solenoid feed system requires that there must be at least 10 pounds pressure difference between the steam pressure in the Unfired Steam Generator and the make-up water pressure. If there is less than 15 pounds pressure differential, a feedwater pump must be used.

The second method is to feed the water from a boiler feed pump unit with a condensate tank. The condensate tank is fed with make-up water and condensate. On a signal from the level controller on the Unfired Steam Generator, a pump is started which pumps the make-up water into the Unfired Steam Generator. When the water level in the Unfired Steam Generator is satisfied, an electrical signal from the level controller signals the water feed pump to stop.

A third method of feeding is a feed water pump, which is connected into the city water or make-up water line and is started and stopped on a signal, from the level controller. In all three cases, there should be a check valve in the line between the boiler and the solenoid, condensate feed pump or feed water pump.

Automatic Blowdown - Timer Based Blowdown is Standard (Less Solenoid Valve)

On Unfired Steam Generators using city water there will be an accumulation of mineral build up in the boiler. These minerals must be disposed of by a blowdown system. The blowdown system can be as simple as a manual blowdown where the maintenance person would blow the boiler off manually for a set period for a set frequency. It is advantageous to offer an automatic blowdown system. The simplest automatic blowdown system is one that operates from timers. There is a seven day, 24 hour interval timer and a duration timer connected to a solenoid valve, which will blow the boiler down. The interval timer can be set in frequencies as close as 2 hours and as far apart as once every seven days. This timer will signal a duration timer, which is adjustable from 2 to 180 seconds. The duration timer sends a signal to a solenoid valve, which opens and blows the boiler down. This is a simple system, but requires the owner of the Unfired Steam Generator to do some analysis to determine the correct frequency and duration timer settings.

Automatic Blowdown - TDS Sampling Method

There is a more sophisticated system, which samples the boiler water and blows the boiler down when the dissolved solids exceed a set point. This is a time sample method, which measures the total dissolved solids by opening the blowdown valve for an adjustable time period and measuring the blow off for dissolved solids. If the total dissolved solids exceed the trip point, the motorized valve will remain open until the fresh water make-up dilutes the boiler water to a safe level of total dissolved solids.

Armstrong Unfired Steam Generators–Horizontal

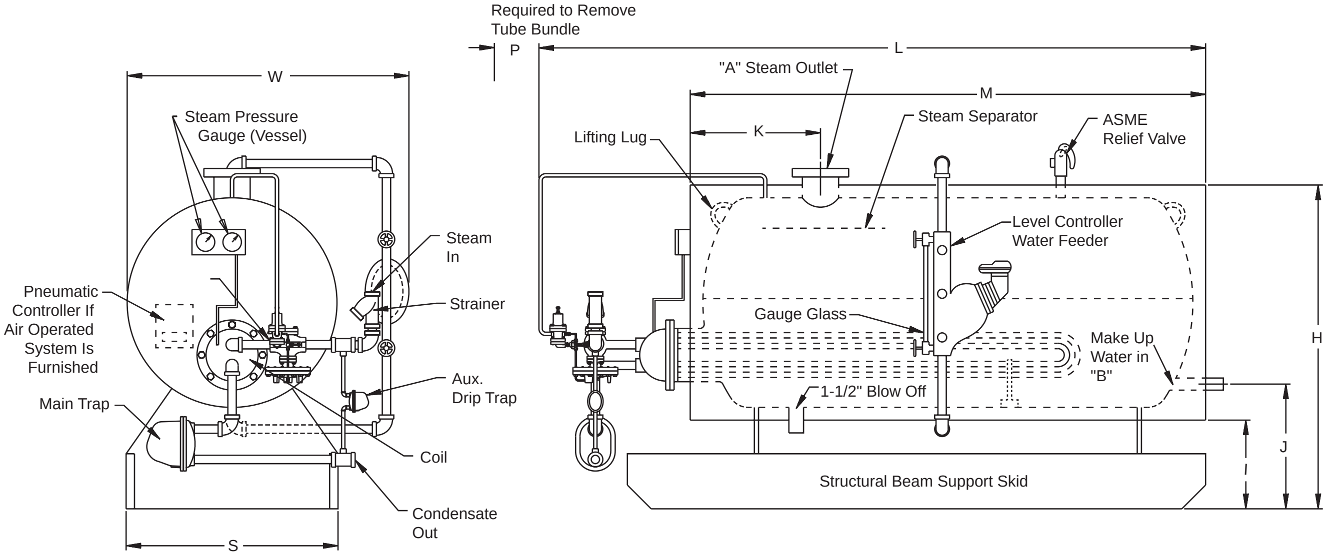

Table 103-1. Dimensions

Model No.	Boiler Vessel Size	W	H	L	S	M	I	J	K	P*	A	B
RB60H	20" x 48"	34"	42"	64"	24"	52"	18"	24"	17"	60"	1-1/2" NPT	3/4"
RB120H	24" x 63"	38"	46"	79"	28"	65"	18"	24"	17"	60"	1-1/2" NPT	3/4"
RB205H	30" x 72"	44"	49"	88"	34"	76"	15"	21"	18"	60"	2" NPT	1"
RB395H	36" x 96"	50"	52"	112"	40"	100"	12"	20"	20"	84"	3" NPT	1"
RB670H	42" x 120"	56"	58"	140"	46"	124"	12"	20"	22"	102"	4" FLG	1-1/2"
RB860H	48" x 120"	62"	64"	140"	52"	124"	12"	20"	24"	102"	5" FLG	2"
RB1085H	54" x 120"	68"	70"	140"	58"	124"	12"	22"	28"	102"	6" FLG	2"
RB1330H	60" x 120"	74"	76"	140"	64"	124"	12"	22"	28"	102"	8" FLG	2"

*This dimension is for the longest coil available, shorter coils with a corresponding shorter "P" dimension are available. Consult factory or your local Armstrong Representative.

All dimensions and weights are approximate. Use certified print for exact dimensions. Design and materials are subject to change without notice.

Armstrong Unfired Steam Generators–Vertical

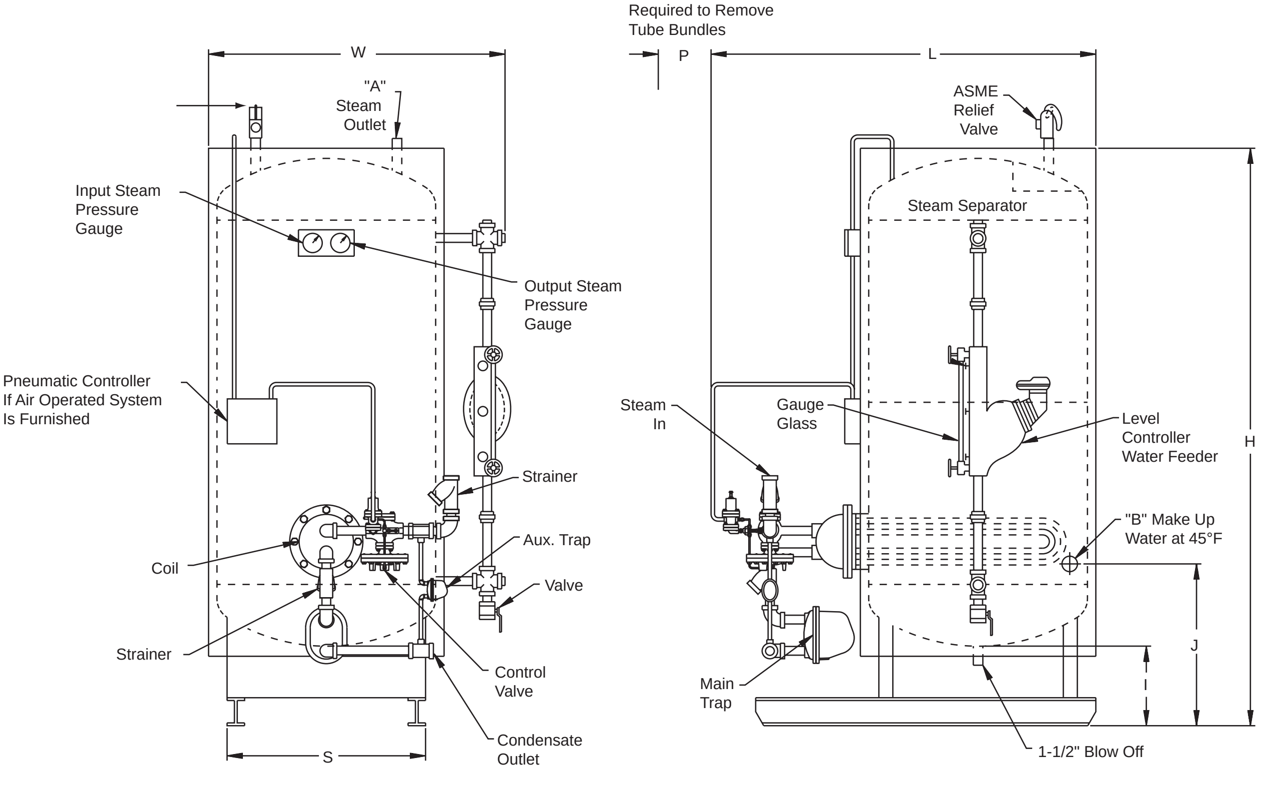

Table 104-1. Dimensions

Model No.	W	H	L	S	I	J	P	A	B
RB45V	34"	54"	36"	20"	12"	20"	10"	1-1/2"	3/4"
RB90V	38"	62"	42"	18"	12"	24"	14"	2"	3/4"
RB160V	44"	74"	48"	21"	12"	28"	20"	3"	1"
RB240V	50"	74"	54"	25"	12"	28"	26"	4" FLG	1"
RB320V	56"	74"	60"	32"	12"	30"	30"	5" FLG	1"
RB410V	62"	74"	66"	42"	12"	30"	38"	6" FLG	1-1/2"
RB510V	68"	74"	72"	44"	12"	31"	44"	8" FLG	1-1/2"

For Steam

To accurately size an Unfired Steam Generator, the following information is required:

1. Source Steam Pressure
2. Output Steam Pressure
3. Make-up Water Temperature
4. Pounds per hour of output steam required

Given this information, Armstrong or its authorized representative can size the Unfired Steam Generator.

All dimensions and weights are approximate. Use certified print for exact dimensions. Design and materials are subject to change without notice.

Notes

All dimensions and weights are approximate. Use certified print for exact dimensions. Design and materials are subject to change without notice.

Series CS-10 Steam-to-Steam Humidifier

Consists of the humidifier, control valve, inverted bucket steam trap, strainer, dispersion tube(s), control panel (if available) and optional humidistat.

Figure 106-1. Model CS-11SF Humidifier

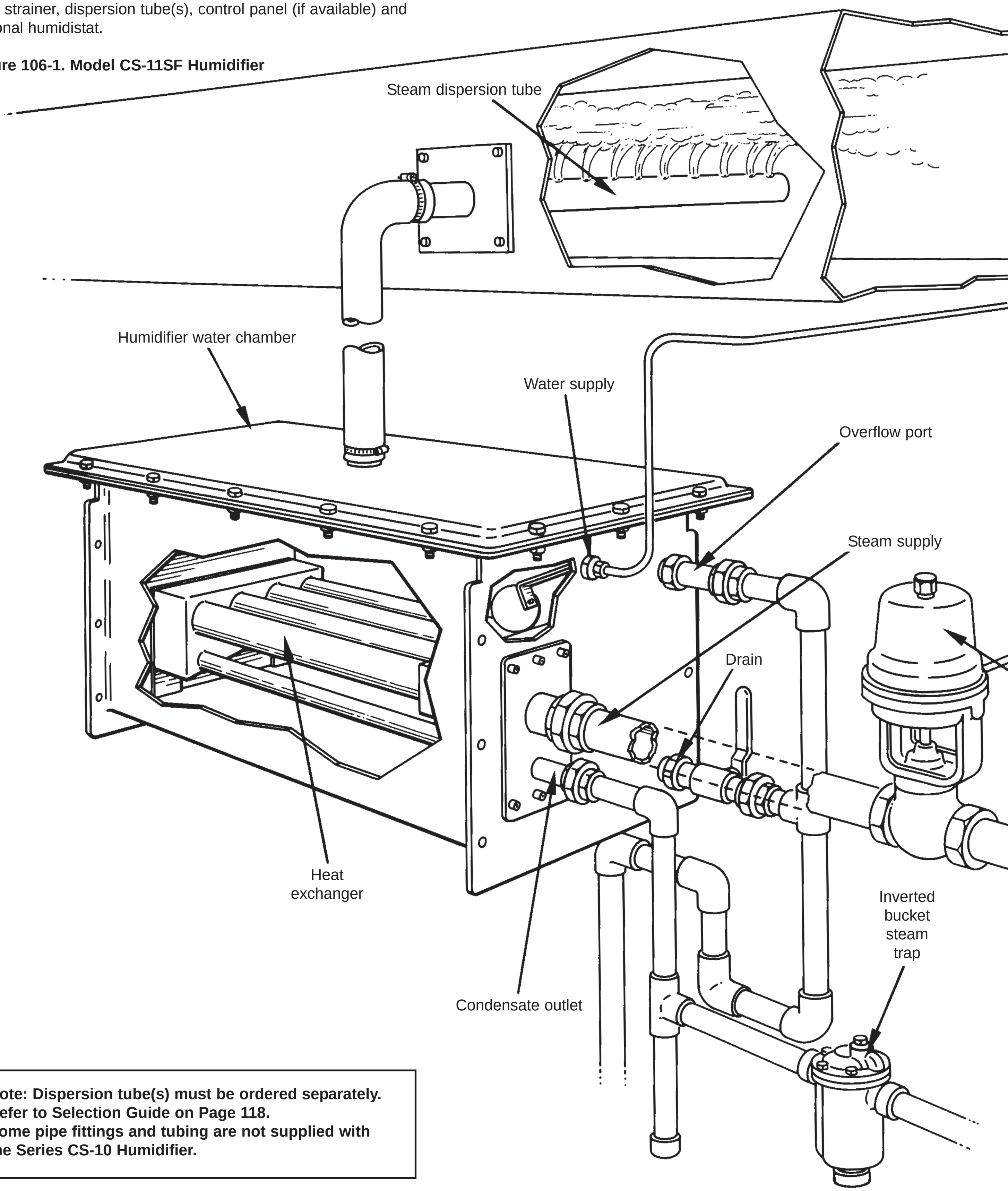

**Note: Dispersion tube(s) must be ordered separately.
Refer to Selection Guide on Page 118.
Some pipe fittings and tubing are not supplied with the Series CS-10 Humidifier.**

Ionic Beds

The use of Ionic Beds in the CS-10 Series will reduce the amount of maintenance, and improve the overall performance of the unit. With the beds in the tank, the scale will build up on the media and reduce the amount of scale on the heat exchanger. This provides a longer heat exchanger life, and a more efficient heat transfer. Ionic beds are not available in all models. See Page 108.

Heavy Duty Construction

of the humidifier chamber, heat exchanger, float mechanism, and duct dispersion tube make the unit rugged and corrosion resistant.

In-line Strainer

with no-crush screen removes most of steam particulate matter.

ACV Series Control Valve

controls the steam flow to the heat exchanger. This valve uses Armstrong's 3/4" stroke, parabolic plug valve design with years of proven field performance. The valve is available for pneumatic, electric or electronic control signals. Reference Table 90-1, Page 90.

Reliable Cast Iron Inverted Bucket Steam Trap

provides dependable drainage because it has only two moving parts and not fixed pivots or complicated linkage to stick, bind or clog.

Safety Features

protect against damage in event of failure. The control valve is designed to fail closed, and the humidifier's water chamber overflow port will protect the unit from over-filling in case of level control failure.

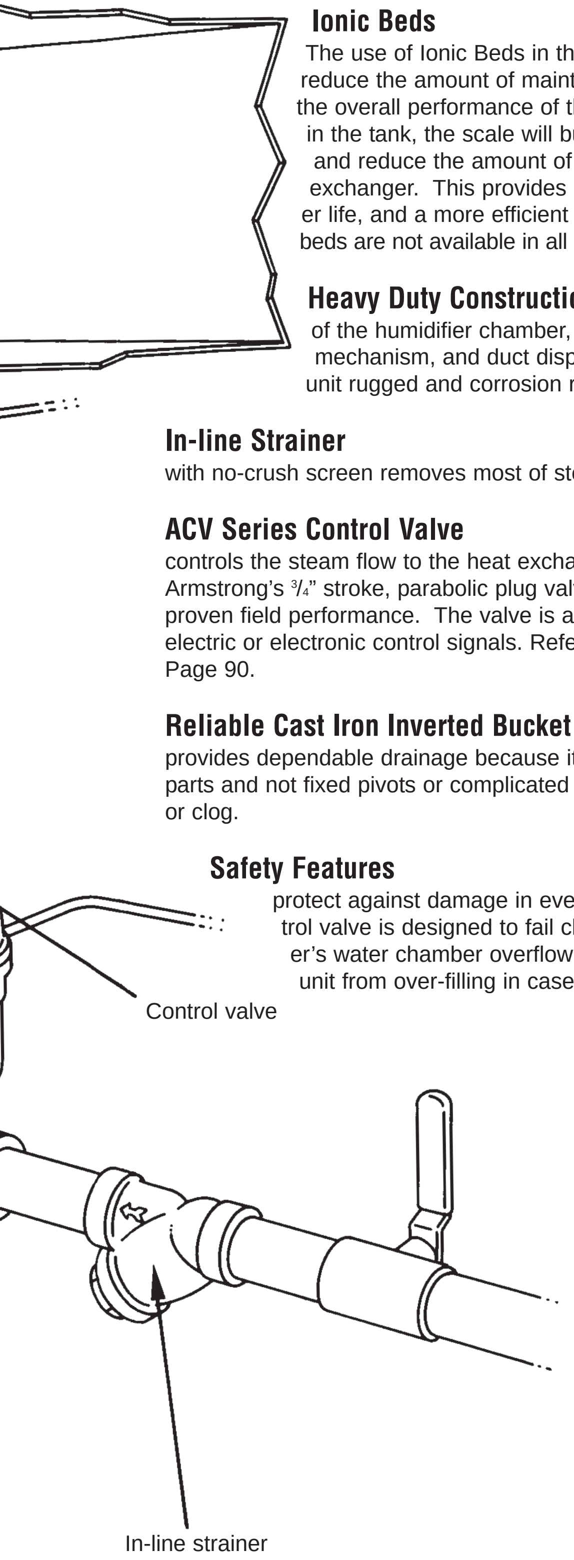

Simplified Cleaning

is facilitated by a removable lid that provides easy access to the heat exchanger for removal of accumulated solids. Optional Teflon coated or phenolic coated heat exchangers are available to further aid in cleaning.

Electronic Control Panel

includes an electronic level control module and terminals for incoming control wiring. Field proven conductance actuated level control probes are used for reliable control of the humidifier's fill and drain valves.

Maintenance

of the Series CS-10, to assure efficient operation of the unit, is important. The production of steam from ordinary tap water will result in solids remaining in the chamber, particularly in models without ionic beds. Periodic cleaning of the chamber and heat exchanger will be necessary. Use of softened or purified water will lessen or eliminate need for cleaning.

If maintenance is a concern, Armstrong offers other solutions. Series 9000 and 1000 Humidifiers are the most reliable, carefree direct-injection humidifiers available. They can be supplied with steam from a central boiler or if boiler water treatment carryover is a concern, can be supplied from a separate dedicated boiler using untreated tap water or an unfired steam boiler.

EHU and HumidiClean Electric Humidifiers are self-generating units, which produce humidifying steam from ordinary tap water.

Figure 107-1. Ionic Beds

Ionic beds are used in Models CS-13CB, CS-14CB, CS-14SB, CS-15CB and CS-15SB.

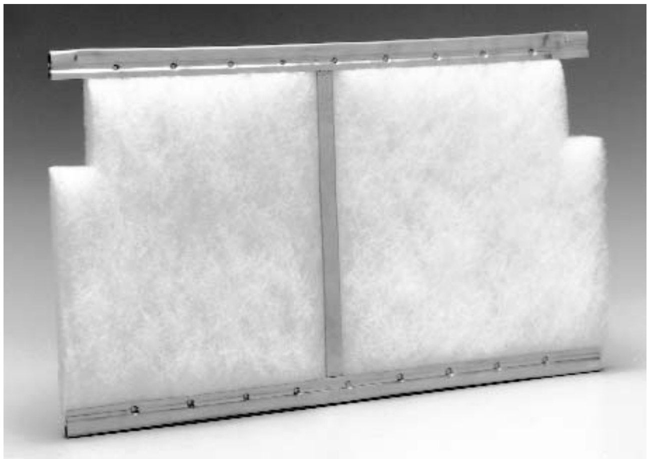

Series CS-10 Humidifiers For Chemical-Free Steam Humidification with Revolutionary Ionic Bed Technology

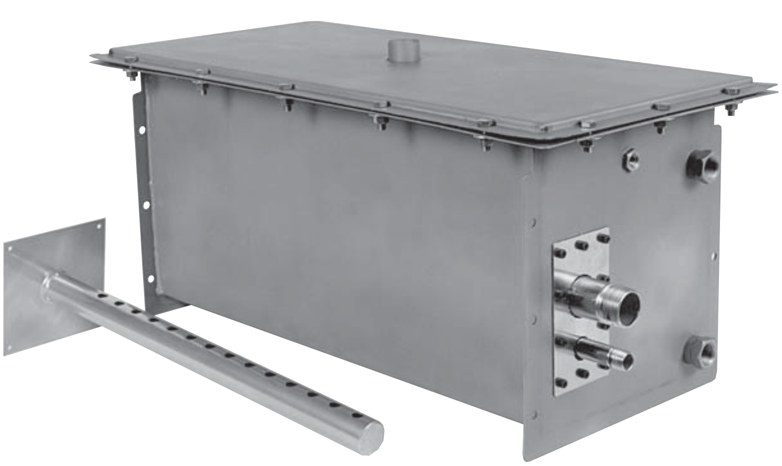

If you have a concern . . . We Have a Solution

For those who are concerned about the effects of water-treatment chemicals in the discharge of humidifying steam, Armstrong offers the Series CS-10 Humidifier.

Chemical Free, Economical Steam From Untreated Water

The Series CS-10 is a steam-to-steam device which uses existing boiler steam to produce clean steam from untreated water. Because the Series CS-10 uses steam from a central boiler as its heat source, the humidifying steam can be produced more economically than from electricity.

The Series CS-10 consists of a heat exchanger submersed in a tank of water. The heat of the steam supplied to the heat exchanger raises the temperature of the tank water to the boiling point, converting the water to steam which is then injected into an air handling system. The result gives all the benefits of steam humidification without the concern for boiler water treatment carryover.

Armstrong, with 60 plus years of experience since inventing the first steam humidifier, has a model to meet every need… to fit every circumstance. The Series CS-10 will meet the needs of facilities requiring the proven benefits of direct-injected steam humidification without the concern for potentially harmful airborne contaminants.

It may be just the solution for your sensitive environment!

Steam Humidification

Many benefits are derived from humidifying work spaces. Proper levels of relative humidity are vital to the preservation of hygroscopic materials such as paper, wood and textiles; to the prevention of electrostatic discharge; to the comfort of workers.

Steam is the recommended medium for humidification. “If the system requires humidification, the humidification process should be limited to the direct injection of steam” (National Research Council, 1987).

When steam for direct-injection humidification is taken from a central boiler it may contain vaporized amines, used to protect boiler and steam system components from corrosion. Testing has shown that carefully administered boiler treatment programs maintain levels of amine in humidified air well within guidelines suggested by OSHA, the ACGIH, and the FDA. There remain some concerns, however, about the effects of volatile, neutralizing amines in steam systems supplying humidifiers. It must be pointed out that the concerns are about the amines themselves, not steam humidification.

Ionic Beds Stop Solids

Ionic beds consist of a fibrous medium that attracts solids from the water as its temperature rises, minimizing the build-up of solids on the heat exchanger and inner tank walls. Once ionic beds have absorbed their capacity of solids, an indicator on the humidifier’s control panel signals it’s time to replace the ionic beds. Changing the beds takes only about 15 minutes. Use of the ionic beds:

- Reduces cleaning of tank exchanger or heating elements
- Keeps the drain screen cleaner longer - allowing effective tank blowdown
- Helps maintain humidifier output without building excessive heat exchanger surface temperatures
- Requires less frequent blowdown, conserving water and energy
- Eliminates the need for wasteful surface skimmers that must be checked weekly for possible plugging
- Reduces downtime
- Offers years of field-proven success in thousands of humidifier applications

Better Here Than in Your Humidifiers

These photos show how the ionic bed fibers (magnified 52.5x) collect solids throughout their service life. A new ionic bed weighs between 1/3 and 1/2 pound, depending on the humidifier type. When it reaches its capacity, an ionic bed may weigh more than 2-1/2 pounds.

New Ionic Bed

After 400 hours

After 800 hours

Capacities and Physical Data

Table 109-1. Continuous Discharge Capacities in Pounds of Steam Per Hour

Inlet Steam Pressure (psig)	Model Number								
	CS-11SB/DI	CS-11CB	CS-12SB/DI	CS-13SB/DI	CS-13CB	CS-14SB/DI	CS-14CB	CS-15SB/DI	CS-15CB
2	2	—	4	5	—	—	—	—	—
5	10	30	30	50	50	75	100	115	200
10	30	65	80	100	175	135	280	270	560
13	33	—	105	150	210	210	350	420	700
15	35	110	120	180	240	260	400	520	800

Capacities based on steam pressure entering control valve.

Table 109-2. List of Materials

Series	CS-10SB	CS-10SF	CS-10DI	CS-10CB	CS-10CF
Chamber and Lid	T304 SS				
Heat Exchanger	T304 SS (T316 Optional)			Electroless Nickel Plated Copper	
Chamber Gasket	SI (Silicone)				
Control Panel (Not Shown)	NEMA 4	NONE		NEMA 4	NONE
Ionic Bed Material*	Proprietary				
Float Mechanism Less Valve	N/A	T304 SS		N/A	T304 SS
Float Mechanism Valve Only	N/A	Viton		N/A	Viton
Level Control Electrodes	18-8 SS & Teflon	N/A		18-8 SS & Teflon	N/A
Dispersion Tube	T304 SS				
Hose Cuff	EPDM				
Gasket Inlet / Outlet	NBR (Buna - N)				
Chamber Cap Screws & Nuts	18-8 SS				
Inverted Bucket Steam Trap	ASTM A48 CL. 30 w/ 18-8 SS				
Control Valve	To Be Specified				
Strainer	ASTM A48 CL. 30 w/ T304 SS Screen				

*Ionic beds are used in Models CS-13CB, CS-14CB, CS-14SB, CS-15CB and CS-15SB.

Table 109-3. Selecting Proper Steam Dispersion Tube

Steam Dispersion Tube Model No.		Steam Dispersion Tube Length		Duct Width				Weight	
CS-11	CS-12, CS-13, CS-14, CS-15			Min		Max.			
		in	mm	in	mm	in	mm	lb	kg
D-1	DL-1	12	30	11	28	16	41	3	1.4
D-1.5	DL-1.5	18	46	17	43	22	56	3	1.4
D-2	DL-2	24	61	23	58	34	86	4	2
D-3	DL-3	36	91	35	89	46	117	6	3
D-4	DL-4	48	122	47	119	58	147	8	3.6
D-5	DL-5	60	152	59	150	70	178	9	4
D-6	DL-6	72	183	71	180	82	208	10	4.5
D-7	DL-7	84	213	83	211	94	239	11	5
D-8	DL-8	96	244	95	241	106	269	12	5.5
D-9	DL-9	108	274	107	272	118	300	13	6
D-10	DL-10	120	305	119	302	130	330	14	6.4

Notes:
When unit has maximum capacity of **greater than** 40 lb/hr, use steam dispersion tube with 1/2” drain.
Models CS-12 and CS-13 require a minimum of two DL dispersion tubes each.
Model CS-14 requires a minimum of two dispersion tubes for capacities **less than** 180 lb/hr. **Greater than** 180 lb/hr requires four dispersion tubes (minimum) or Armstrong HumidiPack.
Model CS-15 may be used with four dispersion tubes (minimum) for capacities **less than** 360 lb/hr. For capacities **greater than** 360 lb/hr, an Armstrong HumidiPack is suggested.

Physical Data, continued…

Figure 110-1. Model CS-11

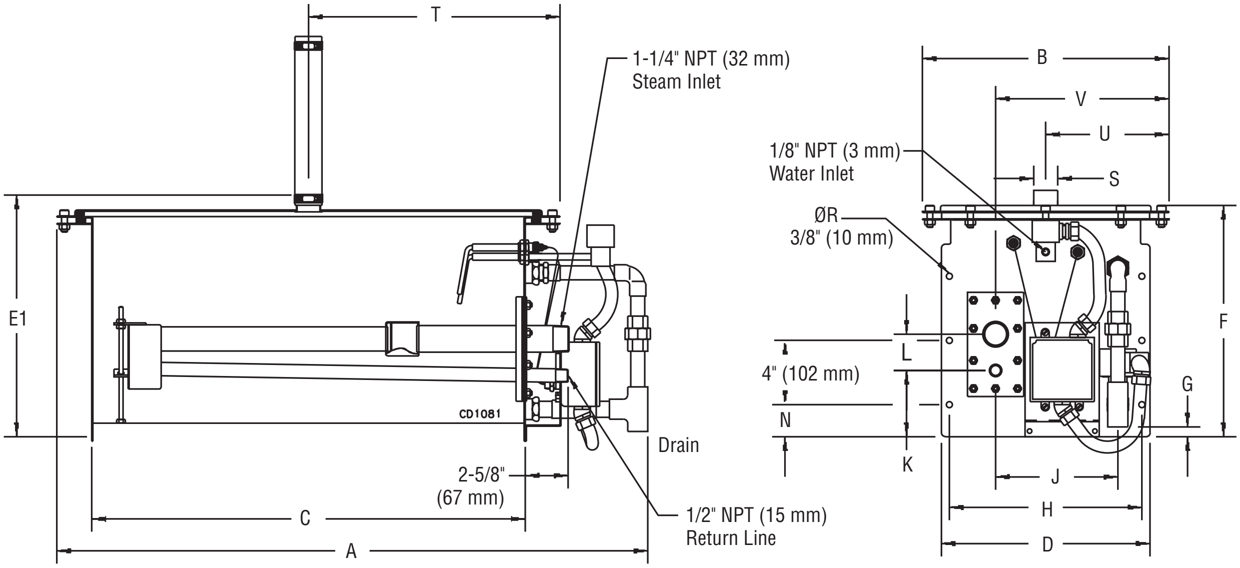

Table 110-1. Dimensions

Item	Description	CS-11		CS-12		CS-13		CS-14		CS-15	
		in	mm	in	mm	in	mm	in	mm	in	mm
A	Length (overall)	36	913	50-3/4	1289	50-3/4	1289	45-1/2	1156	45-1/2	1156
B	Width (overall)	13-3/16	340	19-1/4	489	19-1/4	489	22	559	41-3/4	1060
C	Length from Bottom of Tank	27-1/4	692	42	1067	42	1067	38-1/4	972	38-1/4	972
D	Tank Width	13	330	18-7/8	479	18-7/8	479	23	584	43	1092
E	Tank Bottom to Steam Outlet (4" Flange)	—		22-3/4	578	22-3/4	578	31-3/8	797	31-3/8	797
E1	Tank Bottom to Steam Outlet	22-7/8	580	22-3/4	578	22-3/4	578	31-11/16	805	31-11/16	805
F	Tank Bottom to Top of Lid	17-5/8	448	17-1/2	445	14-11/32	36	26-9/16	675	26-9/16	675
G	Drain to Tank Bottom	15/16	23	15/16	24	15/16	24	—		—	
H	Width ℄ Tank Flange Holes	12-1/4	311	18	457	18	457	22	559	41-3/4	1060
J	℄ of Drain to ℄ Condensate Outlet	7-3/4	197	13-5/8	346	13-5/8	346	8-5/8	219	8-5/8	219
K	℄ Return Line to Tank Bottom	4-3/32	104	3-1/32	77	3-1/32	77	5-3/8	137	5-3/8	137
L	℄ Return Line to ℄ Steam Inlet	3-1/2	89	3-19/32	91	3-19/32	91	9-11/32	237	9-11/32	237
M	℄ Steam Outlet to Edge of Lid	—		6-11/16	170	6-11/16	170	5-1/2	140	5-1/2	140
N	Tank Bottom to 1st Flange Hole	1-3/16	33	1-5/16	33	1-5/16	33	7	178	7	178
R	No. of Tank Flange Holes (Both Ends)	12 holes									
S	Diameter of Steam Outlet	2-3/8	60	4" (100 mm) Raised Face Flange							
				2-3/8	60	2-3/8	60	2-3/8	60	2-3/8	60
T	℄ Steam Outlet to End of Lid	14-5/8	372	22-1/16	560	22-1/16	560	20-1/8	511	20-1/8	511
U	℄ Steam Outlet to Edge of lid	6-11/16	169	9-5/8	244	9-5/8	244	11	279	11	279
V	℄ Return Line to Tank Flange	9-7/8	250	15-3/4	400	15-3/4	400	7-3/16	183	7-3/16	183
Maximum Operating - lb (kg)		183 (83)		398 (181)		413 (188)		920 (417)		1500 (680)	
Shipping Weight - lb (kg)		85 (39)		160 (73)		160 (73)		400 (180)		780 (354)	

All dimensions and weights are approximate. Use certified print for exact dimensions. Design and materials are subject to change without notice.

Figure 111-1. Model CS-12/13

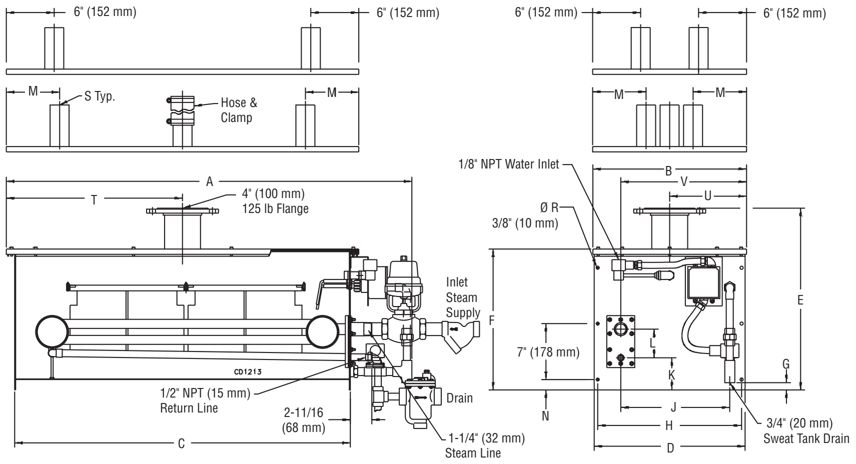

Alternate Lids:
CS-12/13 with 2 or 3 Steam Outlets

Model CS-12/13 Shown with Single 4" (100 mm) Flanged Steam Outlet

Figure 111-2. Model CS-14

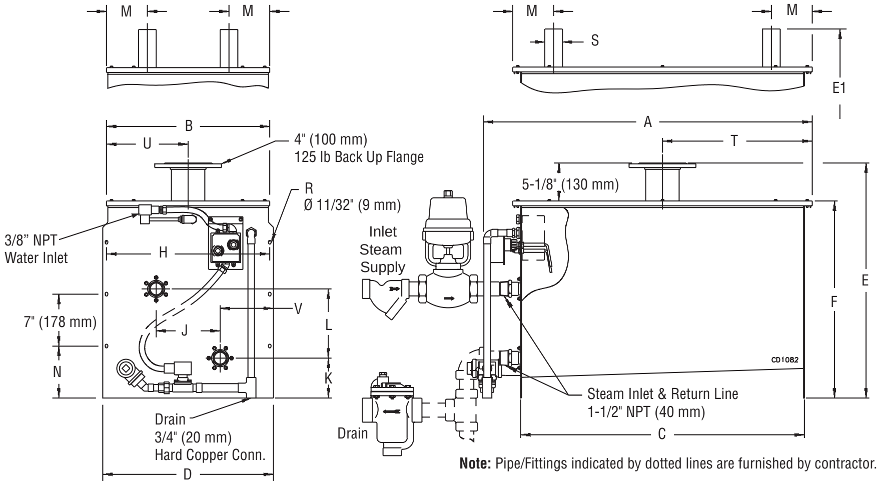

Alternate Lids:
CS-14 with 2 or 4 Steam Outlets

Model CS-14 Shown with Single 4" (100 mm) Flanged Steam Outlet

Note: Pipe/Fittings indicated by dotted lines are furnished by contractor.

Figure 111-3. Model CS-15

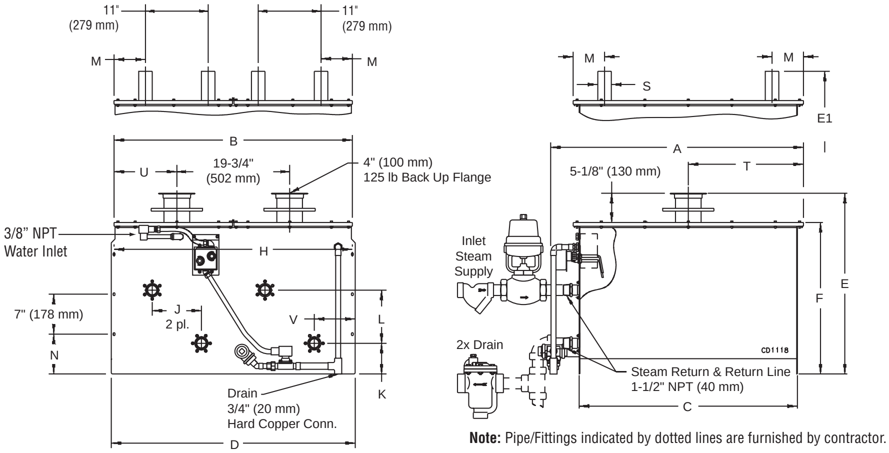

Alternate Lid:
CS-15 with 4 Steam Outlets

Model CS-15 Shown with Two 4" (100 mm) Flanged Steam Outlets

Note: Pipe/Fittings indicated by dotted lines are furnished by contractor.

Series CS-10 Options and How to Order

List of Options

- Control Humidistat
- High Limit Humidistat
- Air Proving Switch
- Teflon Coated Heat Exchanger (Stainless Steel Heat Exchangers only)
- Phenolic Coated Heat Exchanger for DI Water
- 10 Foot Flexible Rubber Hose (CS-11 only)
- Insulation
- Support Legs
- 4" Steam Header with four 2" connections for additional separation and simplified transition to multiple dispersion tubes
- Lid Options

CS-13	(2) 2" connections
	(3) 2" connections (suggested for greater than 180 lb/hr units)
	(1) 4" flanged connection
CS-14	(1) 4" flanged connection
	(4) 2" connections
	(2) 2" connections (less than 180 lb/hr only)
CS-15	(2) 4" flanged connections
	(4) 2" connections (less than 360 lb/hr only)

How to Order

1. Determine model from Table 112-1 below based on capacity and control options:
2. Size of humidifier: **11, 12, 13, 14 or 15**.
   Example of complete model: **CS-11SF**
3. Specify control valve operator type:
   (Mode of control).
   Example: For a pneumatic valve on
   Model CS-11 : ACV-02-AM
4. Length of dispersion tube(s)
   (See Table 109-3, Page 109)
5. Specify steam pressure and capacity required.
6. Specify control voltage to control panel (if applicable)
7. For electric valves only: Specify control valve supply voltage and desired input signal.

Figure 112-1. Series CS-10 Dispersion Tube and Series CS-10 Dispersion Tube with Drain Tube

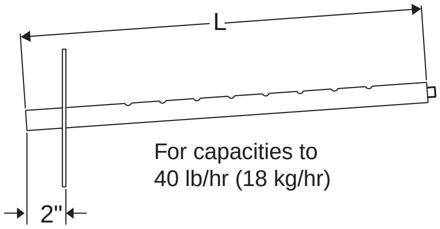

For capacities to 40 lb/hr (18 kg/hr)

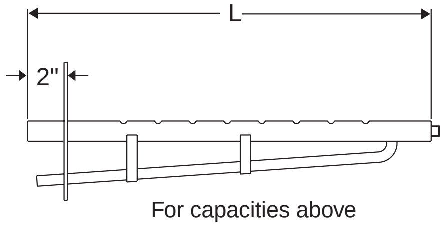

For capacities above 40 lb/hr (18 kg/hr)

Table 112-1. Model Determination Table

Model No.	Coil Material	Level Control	Drain Valve	Control Panel
CS-11SF	Stainless Steel	Float	Optional	N/A
CS-12SF				
CS-13SF				
CS-11CB	Electroless Nickel Plated Copper	Conductance Probe	Standard	Advanced
CS-13CB				
CS-14CB				
CS-15CB				
CS-11SB	Stainless Steel			
CS-12SB				
CS-13SB				
CS-14SB				
CS-15SB				
CS-11DI	Stainless Steel with P403 Coating	Float	N/A	N/A
CS-12DI				
CS-13DI				
CS-14DI				
CS-15DI				

Table 112-2. Series CS-10 Control Valve Selection

Humidifier Model No.	Control Valve Model No.
CS-11	ACV-02
CS-12	ACV-03
CS-13	ACV-03 ACV-04
CS-14	ACV-06
CS-15	HWELL-2

Table 112-3. Series CS-10 Standard Operator Types Available

Pneumatic Modulating

AM = Armstrong C-1801 (ACV-02 & -03 only)
HAM = Honeywell MP953D and F

Electric Modulating

HEM = Honeywell M9182A (0-135 ohm)
HEM = Honeywell M9182A w/A-9847 4-20 mA
HEM = Honeywell M9182A 2-10 Vdc
BLEM = Belimo AF24SR
BNVEM = Belimo NVF24 (ACV-02, -03 &-04 only)

All dimensions and weights are approximate. Use certified print for exact dimensions. Design and materials are subject to change without notice.

Gas Fired
Steam
Humidifiers

GAS

Armstrong

Series GFH Gas Fired HumidiClean with Revolutionary Ionic Bed Technology

Note: Painted steel tank cover shown above is optional.

Performance Features

- Uses natural gas or propane for economical operation
- Category I/III gas fired appliance
- Energy cost savings in comparison to electric humidifiers
- Wide range of humidity outputs to cover a variety of applications
- Modulated control of steam output
- Steam output turndown ratio of up to 30:1
- Low NOx infrared burner
- 82% efficiency rating
- Ionic Bed Technology to reduce cleaning and maintenance

What are Ionic Beds?

Ionic Beds consist of a fibrous medium that attracts solids from the water as its temperature rises, minimizing the buildup of solids on the heat exchanger and inner tank walls. Once the Ionic Beds have absorbed their capacity of solids, the humidifier tells you to change them. Changing the beds takes only about 15 minutes. Use of the Ionic Beds provides these benefits:

- Reduced cleaning of the tank heat exchanger
- Drain screen stays cleaner longer – allowing for effective tank blowdown
- Humidifier output maintained without building excessive heat exchanger surface temperatures
- Less frequent blowdown required...conserving water and energy
- Eliminates the need for wasteful surface skimmers
- Reduces downtime
- Years of field proven success in thousands of humidifier applications

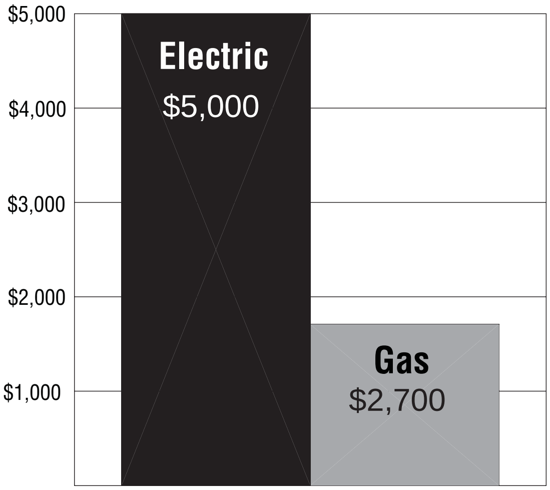

Figure 114-1. Operating Cost
Based on 24 hour per day operation of 155 lb/hr unit in a 10,000 CFM air handler with air side economizer. Electric and gas costs are estimates at $0.07/kWH and $0.58/Thermal.

Ionic Bed Technology

These microscopic photos show how the ionic bed fibers (magnified 52.5x) collect solids throughout their service life. A new ionic bed weighs approximately 3/4 pound. When it reaches its capacity, an ionic bed may weigh more than 4 pounds. A light on the control panel indicates when to replace the Gas Fired HumidiClean's ionic beds.

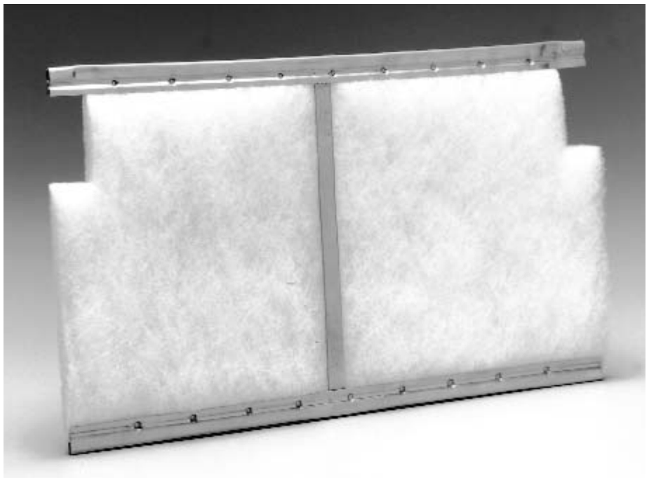

How Armstrong's Gas Fired HumidiClean Works

Upon a call for humidity, the pre-combustion safety check confirms that the duct pressure switch, duct high limit humidistat, and liquid level control circuits are satisfied. The microprocessor then signals the blower to turn on and air movement is sensed by the humidifier's blower pressure switch. The unit then signals the ignition control module to perform a purge cycle. The hot surface igniter comes on and, after it comes up to temperature, the gas valve opens and gas ignition occurs. The flame detection rod senses the presence of the flame and combustion is underway. The humidifier accepts a 0-10 Vdc control signal and provides proportional output in response.

Safety Features

- Pressure Switch - senses air movement in the blower and back pressure on the unit
- Ignition Control Module - monitors combustion of the unit
- Flame Detection Rod - senses flame during combustion
- Liquid Level Control - prevents a low water condition
- Tank Low Level Probe - redundancy to avoid low water condition
- Stack Over-temperature Sensing – prevents overheating
- Tank Insulation - prohibits access to hot tank surface
- End of Season Drain - prohibits standing water during periods of no demand

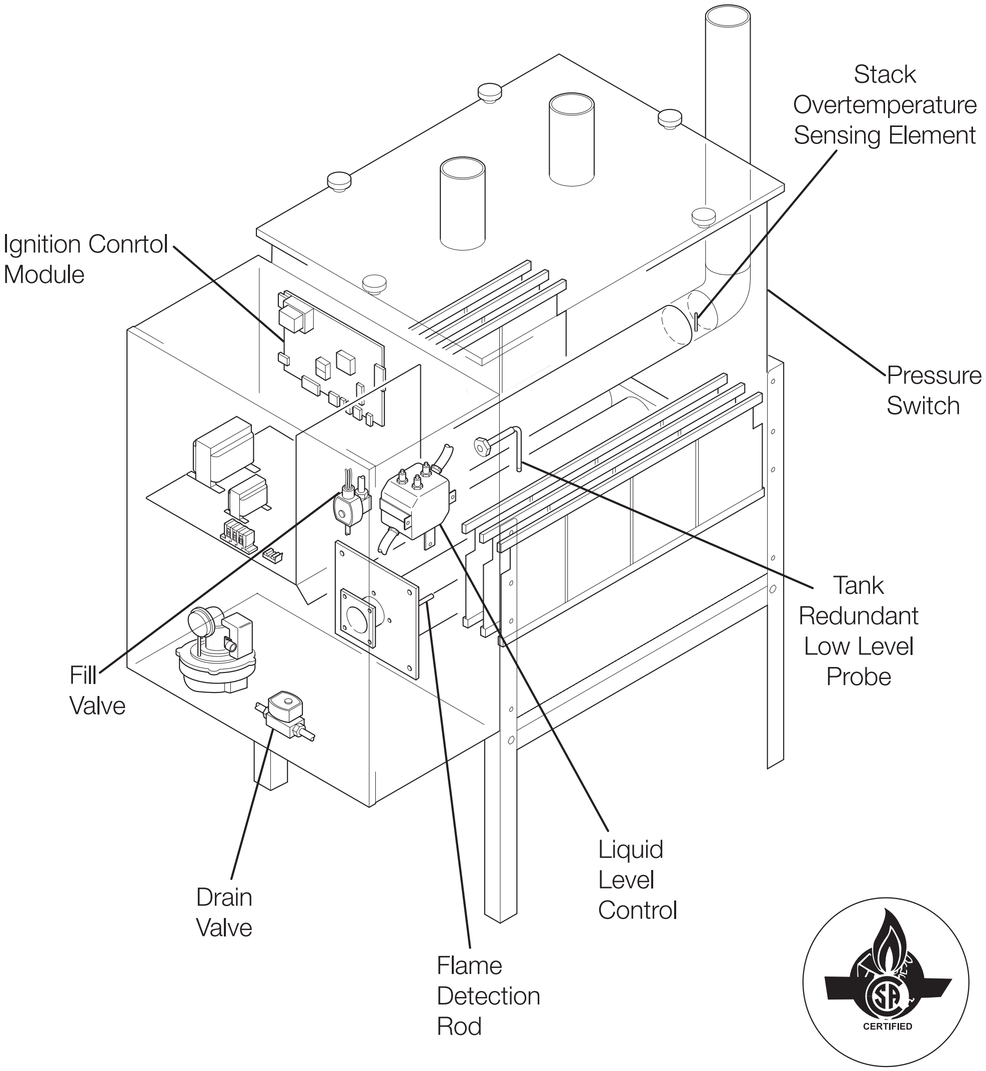

Series GFH Gas Fired HumidiClean Dimensions

Figure 116-1. GFH-150 Dimensions

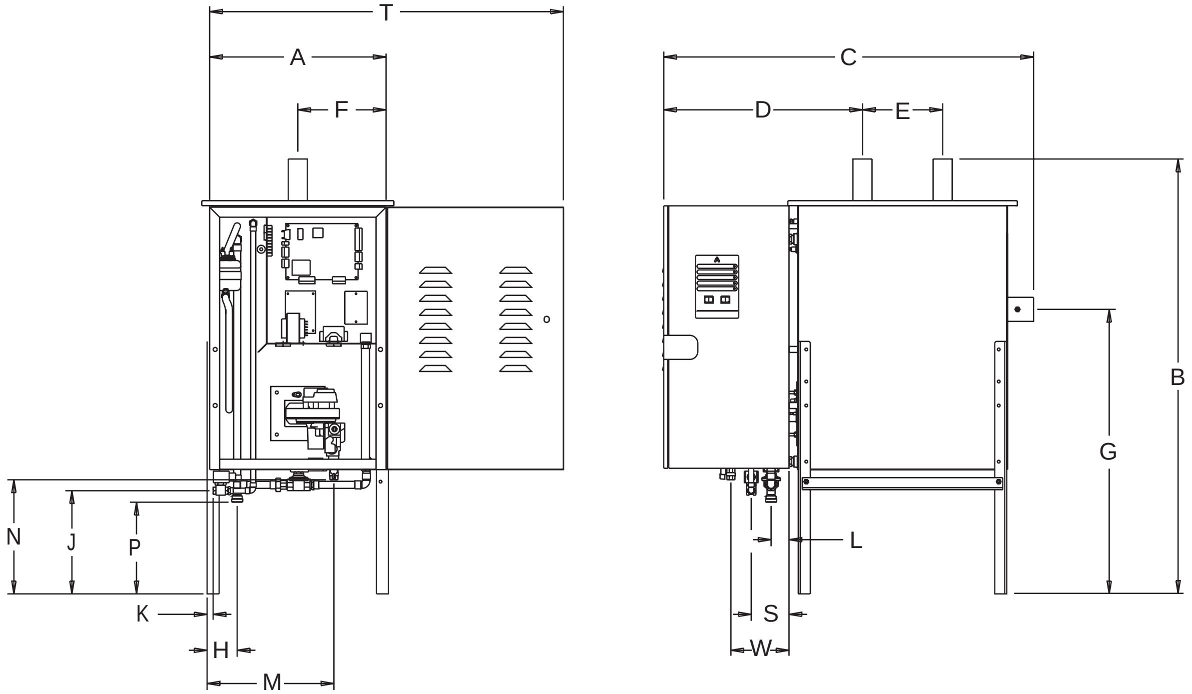

Table 116-1. GFH Gas Fired HumidiClean Dimensions

Description	GFH-150		GFH-300		GFH-450	
	in	mm	in	mm	in	mm
A - Tank Width	22	559	35-1/4	895	48-1/2	1232
B - Overall Height	54-3/16	1378	54-3/16	1376	54-3/16	1376
C - Overall Width	46-1/8	1172	50-3/8	1280	54-7/8	1394
D - Steam Outlet to End of Cabinet	24-13/16	630	23-13/16	605	24-13/16	630
E - Steam Outlet Spacing	10	254	12	305	10	254
F - Steam Outlet to Edge of Tank	11	279	11-5/8	295	16-1/8	410
G - Vent Outlet to Floor	35-1/2	902	40-1/2	1029	40-1/2	1029
H - Drain Outlet to Edge of Tank	3-3/4	95	3-3/4	95	3-3/4	95
J - Water Inlet to Floor	12-7/8	327	12-7/8	327	12-7/8	327
K - Water Inlet to Edge of Tank	3/4	20	3/4	20	3/4	20
L - Drain Outlet to Edge of Tank	2-1/4	57	2-1/8	54	2-1/8	54
M - Gas Inlet to Edge of Tank	15-13/16	402	15-1/2	402	—	—
N - Gas Inlet to Floor	14-1/4	362	7	178	7	178
P - Drain Outlet to Floor	11-7/16	291	9	232	9-1/8	232
S - Water Inlet to Edge of Tank	4-3/4	121	4-5/8	117	4-5/8	117
T - Cabinet Opening Clearance	44-1/8	1121	70-5/16	1786	96-13/16	2459
U - Steam Outlet Spacing	—	—	12	305	16	406
V - Vent Outlet to Front of Cabinet	—	—	47-7/8	1216	51-7/8	1317
W - Gas Inlet to Edge of Tank	7-1/4	84	—	—	—	—
Water Inlet	3/8" NPT	10	3/8" NPT	10	3/8" NPT	10
Drain Connection	3/4"	20	3/4"	20	3/4"	20
Gas Inlet	1/2" NPT	15	1-1/2" NPT	40	1-1/2" NPT	40
Vent Size - Category I (Vertical)*	5"	127	7"	178	8"	203
Vent Size - Category III (Horizontal)**	3"	75	4"	100	5"	127
Steam Outlets	2-3/8" OD / 4" Flg.					
Dry Weight - Lbs (Kg)	295 (134)		415 (188)		540 (245)	
Wet Weight - Lbs (Kg)	700 (318)		1110 (503)		1670 (758)	
Shipping Weight - Lbs (Kg)	425 (193)		550 (249)		700 (318)	

*"B" Vent can be used in vertical vent piping orientation only.
**Category III vent piping is required for horizontal vent pipe orientation.
Maximum vent pipe distance will be 100' equivalent piping distance in either case.

Figure 117-1. GFH-300 Dimensions

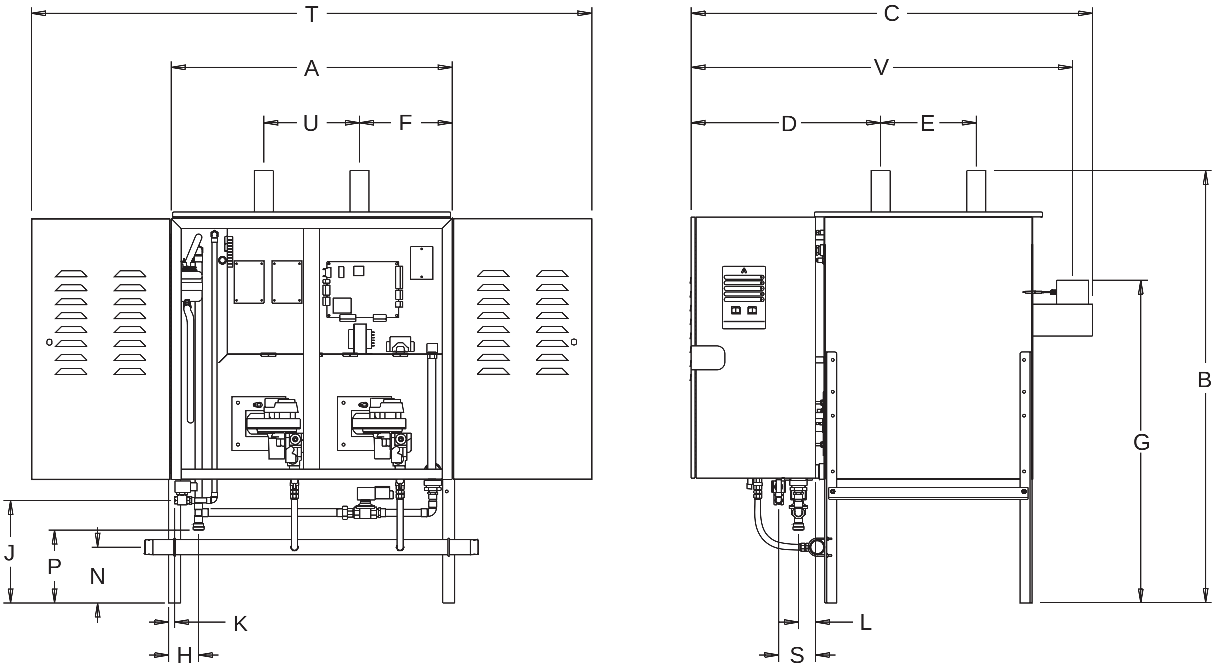

Figure 117-2. GFH-450 Dimensions

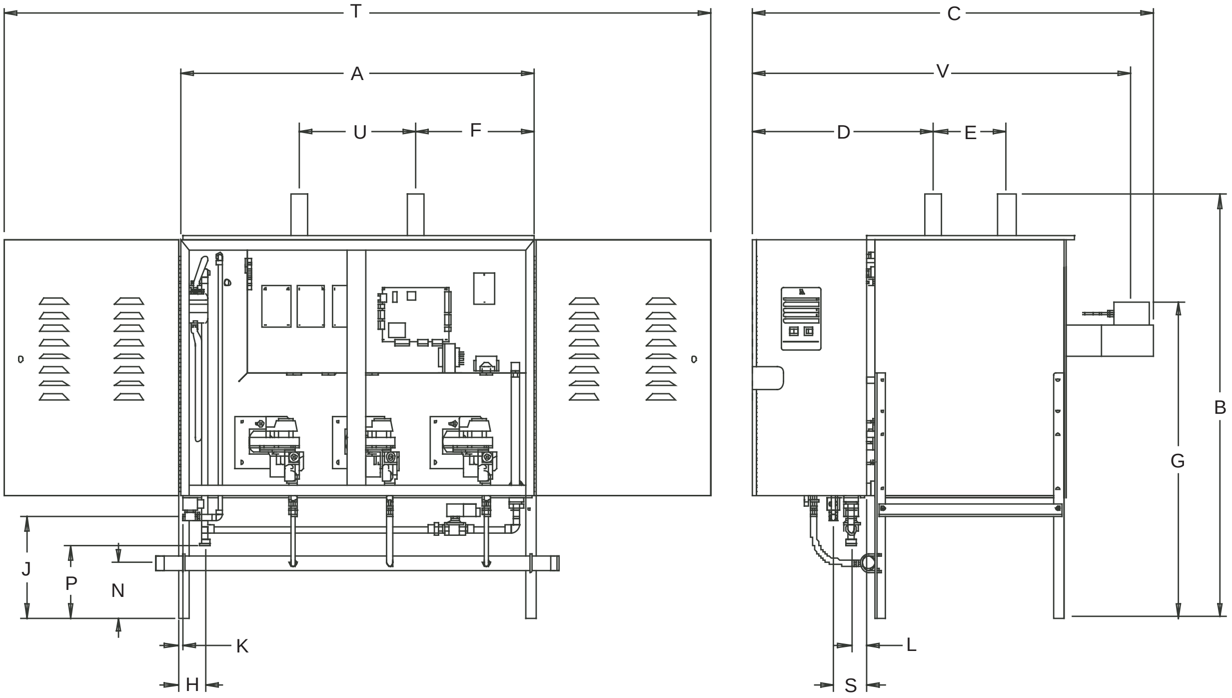

Standard Series GFH is shown. Please consult factory for details on Outdoor Enclosure Series GFHE.

All dimensions and weights are approximate. Use certified print for exact dimensions. Design and materials are subject to change without notice.

Capacities and Physical Data

Table 118-1. Capacities for Natural Gas

Model Number	Steam Capacity		Max. Input
	lb/hr	kg/hr	btu/hr
GFH-150/GFH-150DI *GFHE-150/GFHE-150DI	155	70	210,000
GFH-300/GFH-300DI *GFHE-300/GFHE-300DI	315	143	420,000
GFH-450/GFH-450DI *GFHE-450/GFHE-450DI	475	215	630,000

* Gas Fired Outdoor Enclosure option. See page 122 for more information.

Table 118-1. Capacities for Propane

Model Number	Steam Capacity		Max. Input
	lb/hr	kg/hr	btu/hr
GFH-150/GFH-150DI *GFHE-150/GFHE-150DI	150	68	200,000
GFH-300/GFH-300DI *GFHE-300/GFHE-300DI	308	140	400,000
GFH-450/GFH-450DI *GFHE-450/GFHE-450DI	465	211	600,000

* Gas Fired Outdoor Enclosure option. See page 122 for more information.

Table 118-3. Selecting Proper Steam Dispersion Tube

Steam Disp. Tube Model No.	Steam Disp. Tube Length		Duct Width				Weight	
			Min.		Max.			
	in	mm	in	mm	in	mm	lb	kg
DL-1	12	304	11	279	16	406	3	1.4
DL-1.5	18	457	17	432	22	559	3	1.4
DL-2	24	609	23	584	34	864	4	2
DL-3	36	914	35	889	46	1168	6	3
DL-4	48	1219	47	1194	58	1473	8	3.6
DL-5	60	1524	59	1499	70	1778	9	4
DL-6	72	1829	71	1803	82	2083	10	4.5
DL-7	84	2133	83	2108	94	2388	11	5
DL-8	96	2438	95	2413	106	2693	12	5.5
DL-9	108	2743	107	2718	118	2998	13	6
DL-10	120	3048	119	3023	130	3302	14	6.4

Series GFH requires a minimum of two dispersion tubes for capacities less than 180 lb/hr. Greater than 180 lb/hr requires four dispersion tubes (minimum) or Armstrong HumidiPack.

Standard derating factor for higher altitudes is 4% per 1,000 feet above 2,000 feet.

Figure 118-1. Armstrong DL type dispersion tube.
Minimum of two required. See Table 118-1 above.

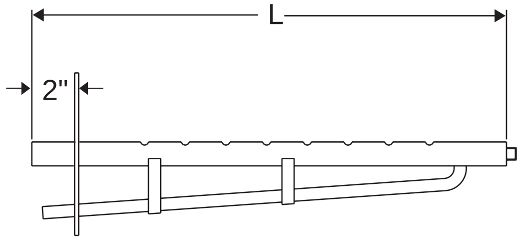

Selection and Ordering Procedure

- **Compute capacity required** - Consult the Humidification Engineering section of this catalog or Armstrong's Humid-A-ware Humidification Sizing and Selection Software which are useful tools in sizing load requirements. Both may be downloaded from Armstrong's web site at www.armstronginternational.com.
- **Specify fuel gas to be used** - Natural gas or propane
- **Humidity Control Selection** - The standard Armstrong humidistat is 0-10 Vdc control and is adjustable by a front mounted dial from 5-95% RH. Specify room or duct type humidistat. If you are providing your own controller, specify the control signal type.
- **Specify spare ionic bed inserts** - Armstrong recommends the purchase of a spare set of ionic beds if the humidifier is to be in service on a year-round basis (not applicable for DI or RO water).
- **Duct Unit** - Specify steam dispersion tubes (See Table 118-3, Page 118). Alternatively, specify HumidiPack and indicate the following:
  - Duct height and width
  - CFM
  - Duct air temperature
  - Final duct RH%
  - Non-wettable vapor distance available
  - Maximum allowable air pressure drop (inches W.C.)
- **Specify water source** - Indicate if the water service will be tap, deionized, demineralized, softened or reverse osmosis water
- **Specify options required:**
  - **Duct high-limit humidistat (Recommended)**. We suggest use of the high limit humidistat. Typical setting for the high limit humidistat is 85% RH. Stat opens when relative humidity exceeds settings. A modulating high-limit humidistat is also available for VAV systems.
  - **Fan interlock. (Recommended)**. A duct pressure switch is one form of fan interlock to activate the humidifier by sensing airflow in the duct system. The pressure switch prevents humidifier operation if there is insufficient air movement in the duct system.
  - **Painted Enclosure**
  - **Sealed Combustion**
  - **Outdoor Enclosure**

Suggested Specification for Series GFH Humidifiers

A. Humidifier shall generate steam from demineralized, deionized (DI), reverse osmosis (RO), softened, or ordinary tap water (specify DI model for DI or RO water).

B. Humidifier shall utilize disposable ionic bed inserts for tap water service to attract solids from boiling water. Ionic beds ensure control through responsiveness and consistent humidity output regardless of water quality and minimize downtime required for tank cleaning. Ionic beds not utilized on DI or RO water.

C. Full top surface of tank removable for easy access to ionic beds.

D. Internal components contained in a steel enclosure with key locked access doors to prevent unauthorized access.

E. **Optional** painted steel cabinet tank enclosure.

F. Heat exchanger constructed of stainless steel.

G. Infrared burner.

H. Forced draft combustion system. Capable of discharging vent gases into category I vent pipe in vertical orientation and category III for horizontal orientation.

I. Humidifier shall include variable speed combustion blower.

J. Humidifier shall be CSA certified and CGA approved.

K. Humidifier shall monitor tank-operating history, and display will indicate when unit needs ionic bed replacement. Service life cycle may be field adapted to match water quality.

L. Humidifier shall provide modulated output and is field adaptable to 0-10 Vdc, 4-20 milliamp, 1.9-3.9 Vdc, 0-5 Vdc or an on/off input signal.

M. Tank drain cycle shall be based on operating history in order to conserve water and energy. Drain cycle shall be field adjustable.

N. After 72 hours of no demand, humidifier will drain the tank.

O. Unit shall monitor tank water level and will shut down power to the gas train to prevent unsafe operation upon failure of the drain system or fill system.

P. Humidifier shall utilize a thermal safety switch to monitor stack temperature and prevent overheating.

Q. Humidifier shall incorporate stainless steel conductance actuated probes with Teflon insulation for liquid level control on tap water service. For DI or RO water, humidifier shall use float switches for liquid level control.

R. Humidifier shall include lights indicating the unit has power on, is in the process of steam generation, has a diagnostic error, or that the ionic beds are at the end of their service life.

S. Humidifier fill water line shall have an air gap to prevent back-flow (syphoning) of tank water into the potable water supply system.

T. Humidifier shall incorporate electrical terminals for installation of controlling stat, duct high-limit stat, fan interlock switch, and Class 2 alarm device.

U. Humidifier shall be supplied with two or more stainless steel dispersion tubes which provide uniform steam distribution over the entire tube length and shall be supplied at various lengths (through 10 feet) to adequately span the widest dimension of the duct. Alternatively, humidifier shall be supplied with HumidiPack prefabricated separator/header and multiple dispersion tube assembly designed for the application in order to shorten the non-wettable vapor trail.

V. When applicable, humidifier shall have provisions for discharging steam vapor directly into room area using factory available fan distribution units as an accessory. These units shall be designed for remote mounting.

W. Humidifier shall be supplied with hose cuffs for connection to hard copper tube (customer supplied).

X. Tank insulation supplied standard with each unit.

Y. When required, outdoor enclosure model shall be factory assembled, tested and shipped with humidifier integral to it.

Z. Optional support of sealed combustion in which outdoor air for combustion is supplied through dedicated piping to a factory supplied PVC connection.

Series GFH Gas Fired HumidiClean Installation Concepts

The Gas Fired HumidiClean must be installed in locations that allow routine inspection and accessibility for maintenance operations.

Do not place Gas Fired HumidiCleans in locations where unusual instances of malfunction of the humidifier or the system might cause damage to non-repairable, unreplaceable or priceless property.

Duct Type Distribution

Where an existing air handling system is available, steam is commonly discharged into the system through two or more dispersion tubes. Selection of the dispersion tubes should meet the duct requirements in Table 118-3, Page 118. If the steam dispersion tubes are to be located below the humidifier, install a drip with water seal (See Figure 120-4, Page 120).

Alternative for Shortened Non-Wettable Vapor Trail… HumidiPack™

Use of traditional dispersion tubes (See Figure 120-1) typically provides satisfactory non-wettable vapor trail performance in duct applications with the Gas Fired HumidiClean. However, for applications with particularly limited downstream non-wetting distance, HumidiPack may be considered. HumidiPack is a prefabricated separator/header and multiple dispersion tube assembly (See Figure 120-3, Page 120). It provides uniform distribution and a shortened non-wettable vapor trail. See Pages 22 and 23 of the Humidification Engineering section.

Area Distribution Method

The Armstrong EHF-3 fan package provides humidity distribution where an air handling system is not available. The fan package (See Figure 121-2, Page 121) is designed to be hung on a wall to operate as a remote-mounted, direct area discharge option for use with Gas Fired HumidiClean. The EHF-3 incorporates a blower rated at 120 V-2.90 amps. CFM rating is 465. The standard fan package requires a separate 120 volt power supply.

Note: A minimum of two EHF-3 fan units are required for the Gas Fired HumidiClean Model GFH-150, a minimum of three for GFH-300 and a minimum of four for GFH-450.

Note: All Gas Fired HumidiCleans are shipped as free standing units. They are not intended to be wall mounted.

Note: For all Gas Fired HumidiClean units: Please contact factory for duct applications offering high static pressure (>4" W.C.) or velocities over 2,000 FPM. Avoid placing dispersion tubes in downward, high velocity airflow. Please contact your local Armstrong Representative with questions.

Figure 120-1
General installation Concepts

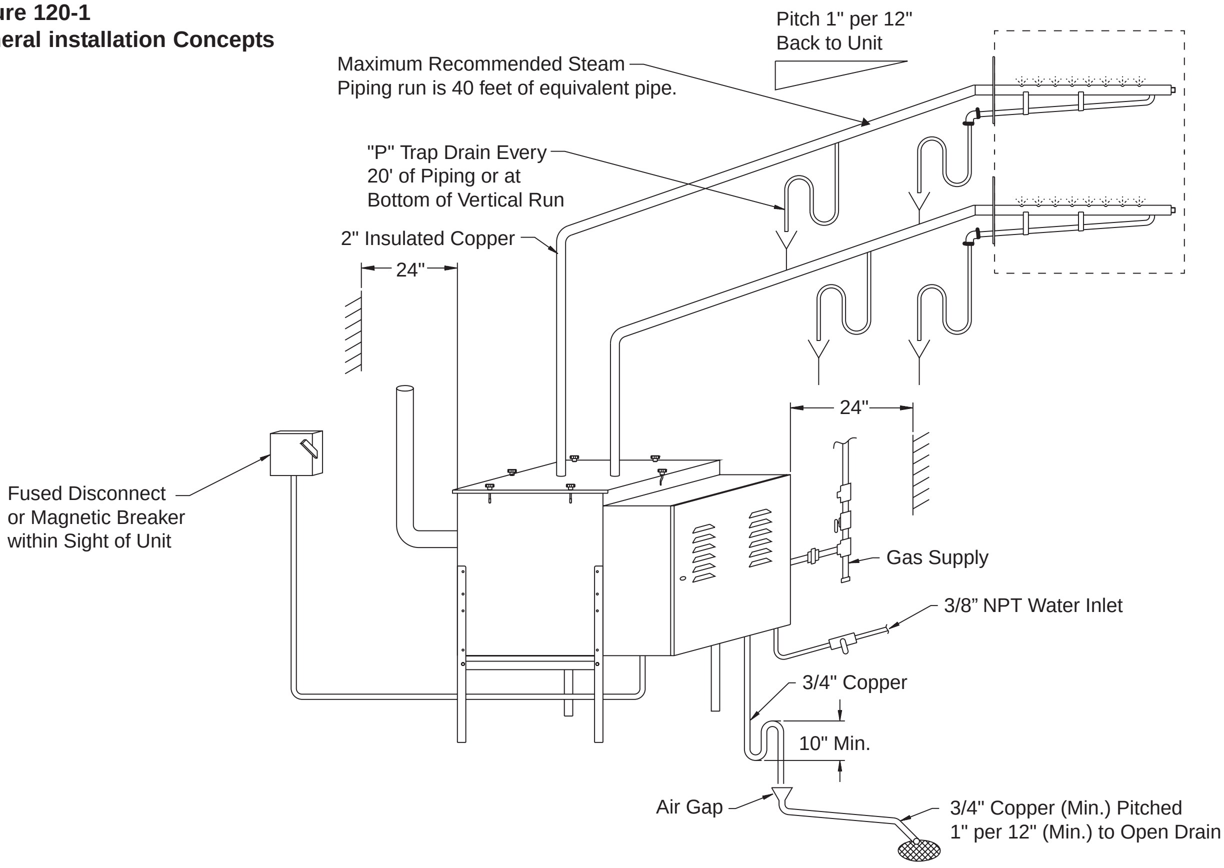

All dimensions and weights are approximate. Use certified print for exact dimensions. Design and materials are subject to change without notice.

Figure 121-1
Duct Type Steam Distribution
(Model GFH-150 shown)

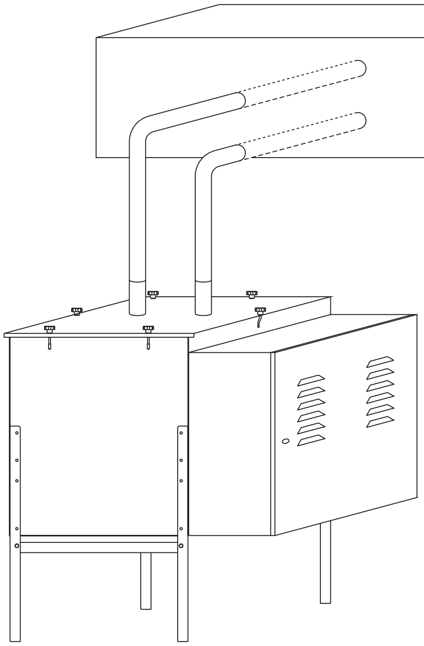

Figure 121-2
With EFH-3 Fan Packages Mounted on Wall
(Model GFH-150 shown)

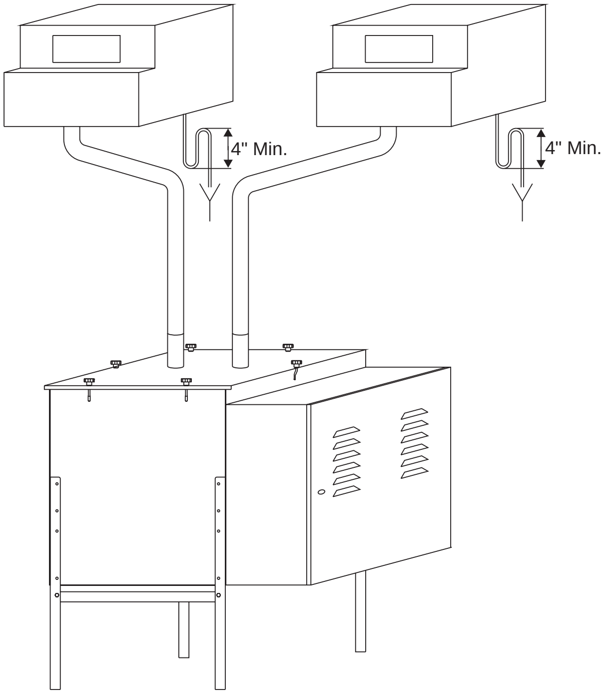

Figure 121-3
Piped to a HumidiPack
(Model GFH-150 shown)

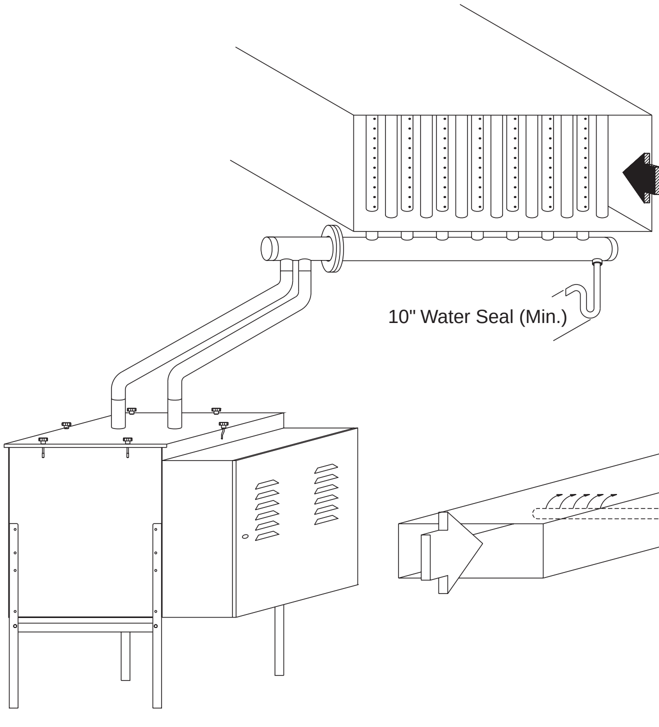

Figure 121-4
Duct Mounted Below Humidifier
(Model GFH-150 shown)

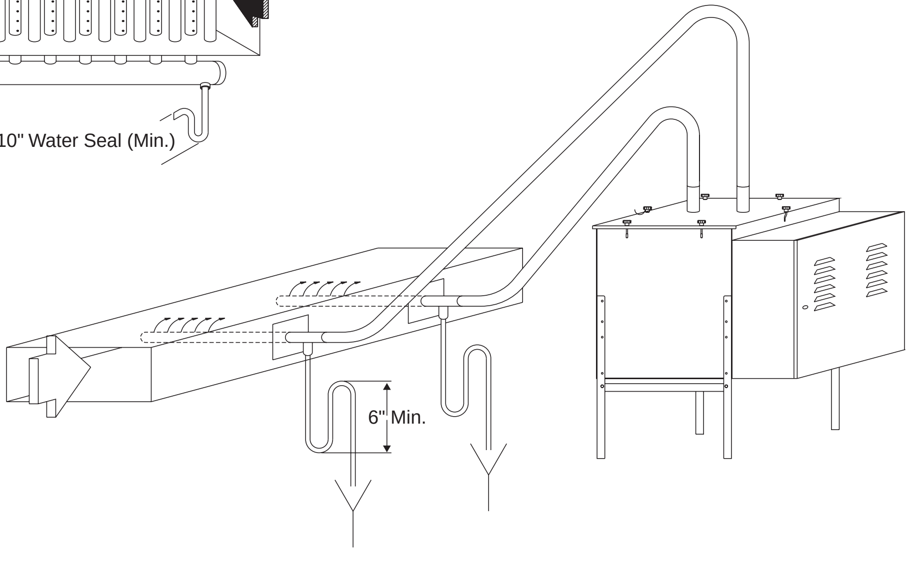

All dimensions and weights are approximate. Use certified print for exact dimensions. Design and materials are subject to change without notice.

Armstrong® Gas Fired Outdoor Enclosure Unit (Optional)

The Series GFHE unit is intended to be used where the gas fired unit will need to be mounted outdoors.

Site Selection:

- Provide a level, solid foundation for the humidifier. In the case where the unit will be mounted on a curb, verify a gasket will be used between the curb and the GFHE unit to protect against moisture entering the building. If the unit will be mounted on poured concrete pad, verify the pad will properly support the unit and all support point dimensions are accurate.

- The GFHE was intended to only be moved either by a forklift using the skid the unit was shipped on, or by lifting the hooks provided.

- If being moved by a forklift, with skid in place, make sure the forks extend the entire width of the unit. Forks that do not extend the entire width could cause the unit to tip, which could create an unsafe moving situation or could cause the unit to be dropped, causing permanent damage to the unit.

- If the unit is to be lifted using the lifting hooks, a load spreader must be used. The load spreader shall be wide enough to ensure the lifting cables clear the sides of the units. The load on the cables should be distributed for even lifting, preventing the unit from tipping.

- Verify all frame and support bolts have not loosened during shipping.

- The humidier should be mounted in a location where all panels can be easily accessible and removed if required for servicing.

- The humidifier should be located in an area where the fresh air inlets are not close to any other exhaust systems, or in any location where potentially flammable vapors or liquids could be taken in to the combustion chamber.

- Remove unit from shipping skid prior to locating final position of unit.

- Please check drawings below for particular model numbers to locate all utility knockout locations in outdoor enclosure for all utilities and flue piping. Use the appropriate plugs or knock outs for each utility required. In the event any utility piping needs to be run thru the bottom of the unit, all holes will have to be sealed around the piping. The bottom of the unit is also used as the drain pan.

- All water lines should be run to eliminate the possibility of freezing, and should be insulated.

- Combustion air intakes are located on the access panels. In the instance a sealed combustion package is used, verify all connections are secure and filter is in place in the inlet filter box. Air intakes should be positioned to avoid having natural air flow blowing directly into the air intakes.

- Verify filter is in place for electronics cabinet air intake.

- If the unit was provided with optional factory installed sealed combustion kit, verify all clamps and connections are secure.

- In environments where the GFHE unit will be exposed to extreme cold conditions, an optional heater package can be provided. If the heater package is installed, there will be two non-adjustable thermo stats factory pre-set to energize the heaters if the ambient temperature in the cabinet fall below 60°F. The heaters will stay energized until the internal cabinet temperatures reach 75°F.

- External flue piping will be filed installed, and supplied by installing contractor. Flue piping can be installed on either side of the unit (see drawings on pages 123-124). Consult local codes for exact flue height requirements. B-Vent type piping will be acceptable for all the outdoor enclosure units.

- An optional curb package can be provided with the unit. Please consult factory, or your local Armstrong Sales Representative for more information.

Figure 123-1. Gas Fired Roof Installation

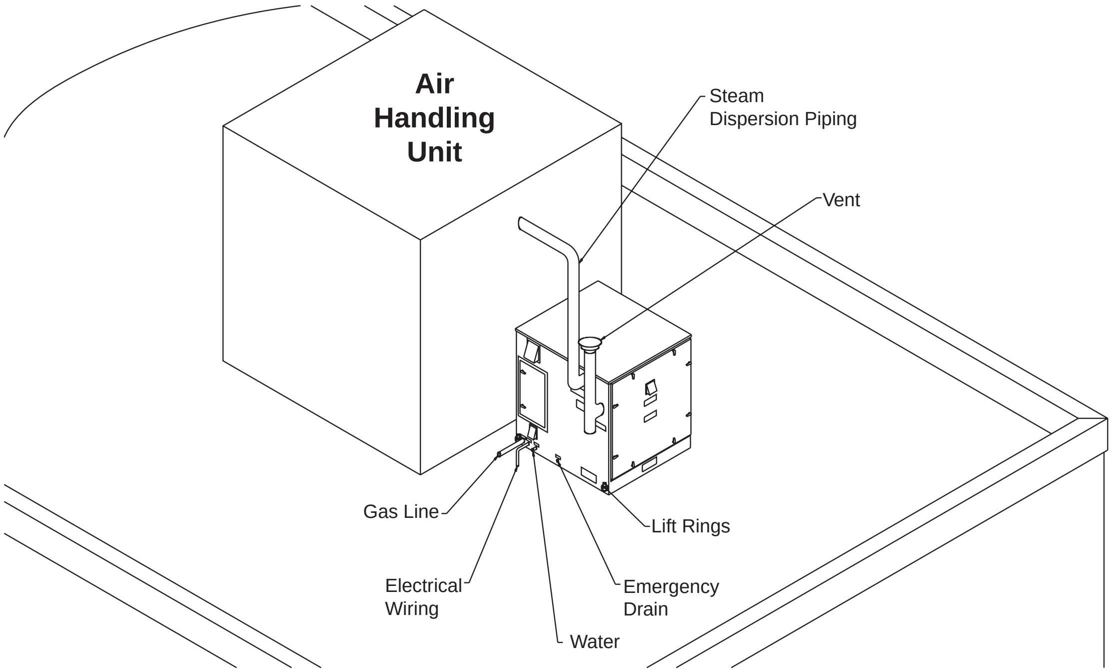

Figure 121-3. GFHE 150 Outdoor Enclosure

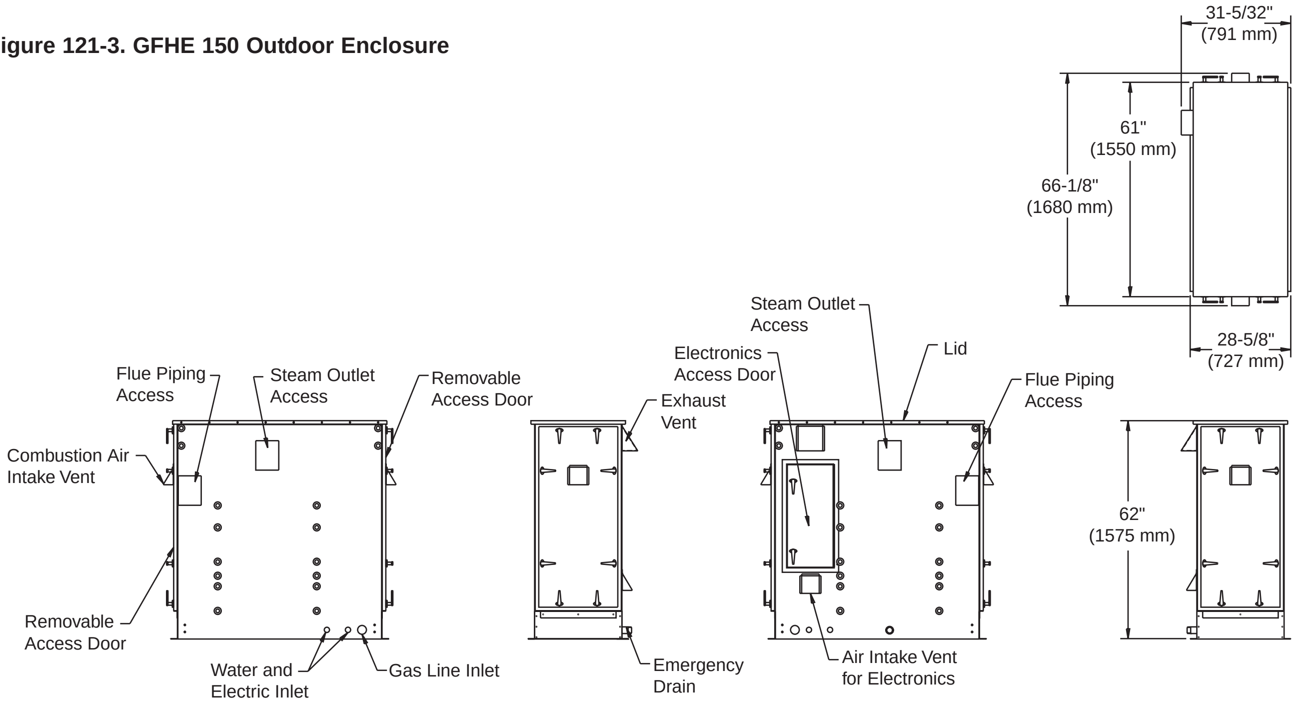

All dimensions and weights are approximate. Use certified print for exact dimensions. Design and materials are subject to change without notice.

Figure 124-1. GFHE 300 Outdoor Enclosure

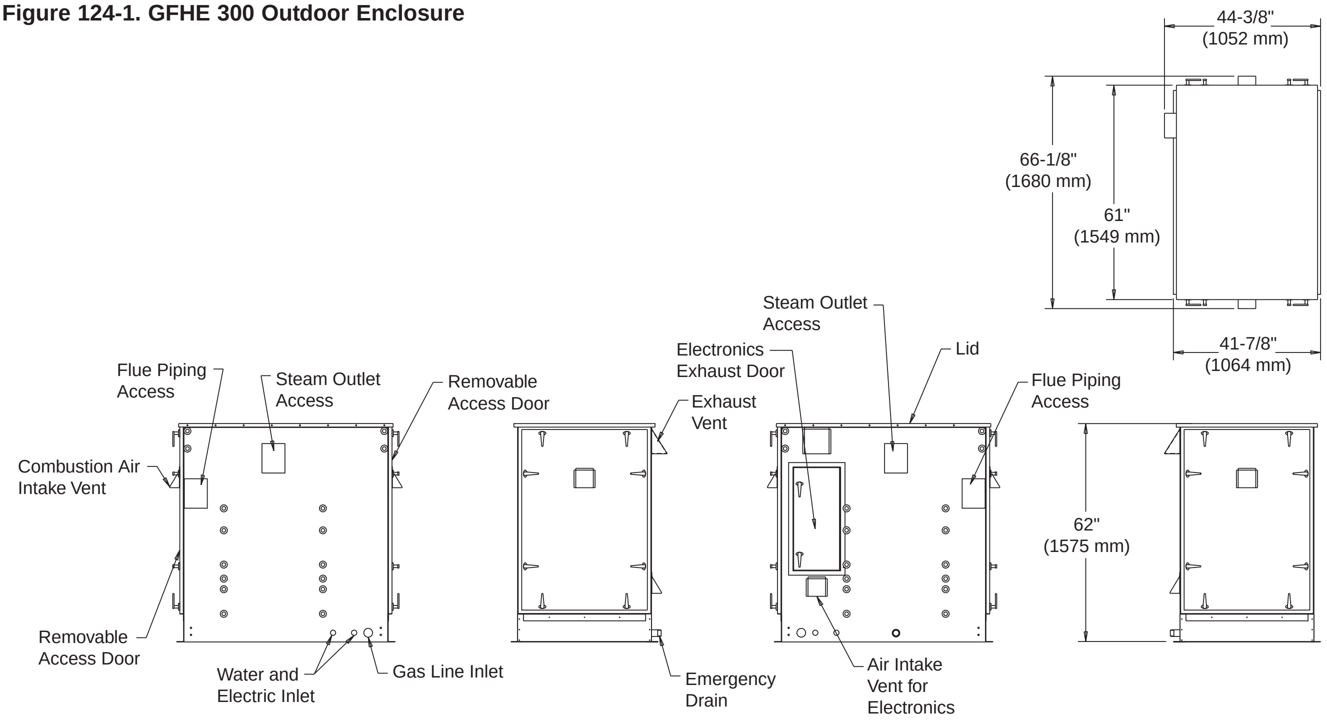

Figure 124-2. GFHE 450 Outdoor Enclosure

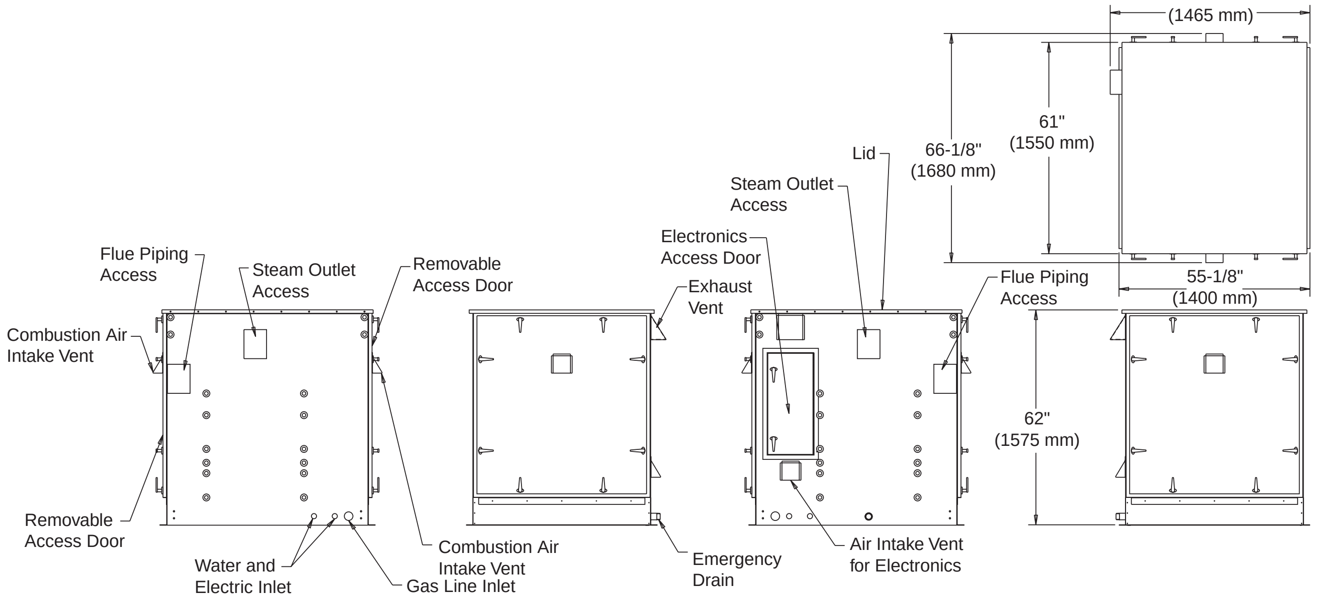

All dimensions and weights are approximate. Use certified print for exact dimensions. Design and materials are subject to change without notice.

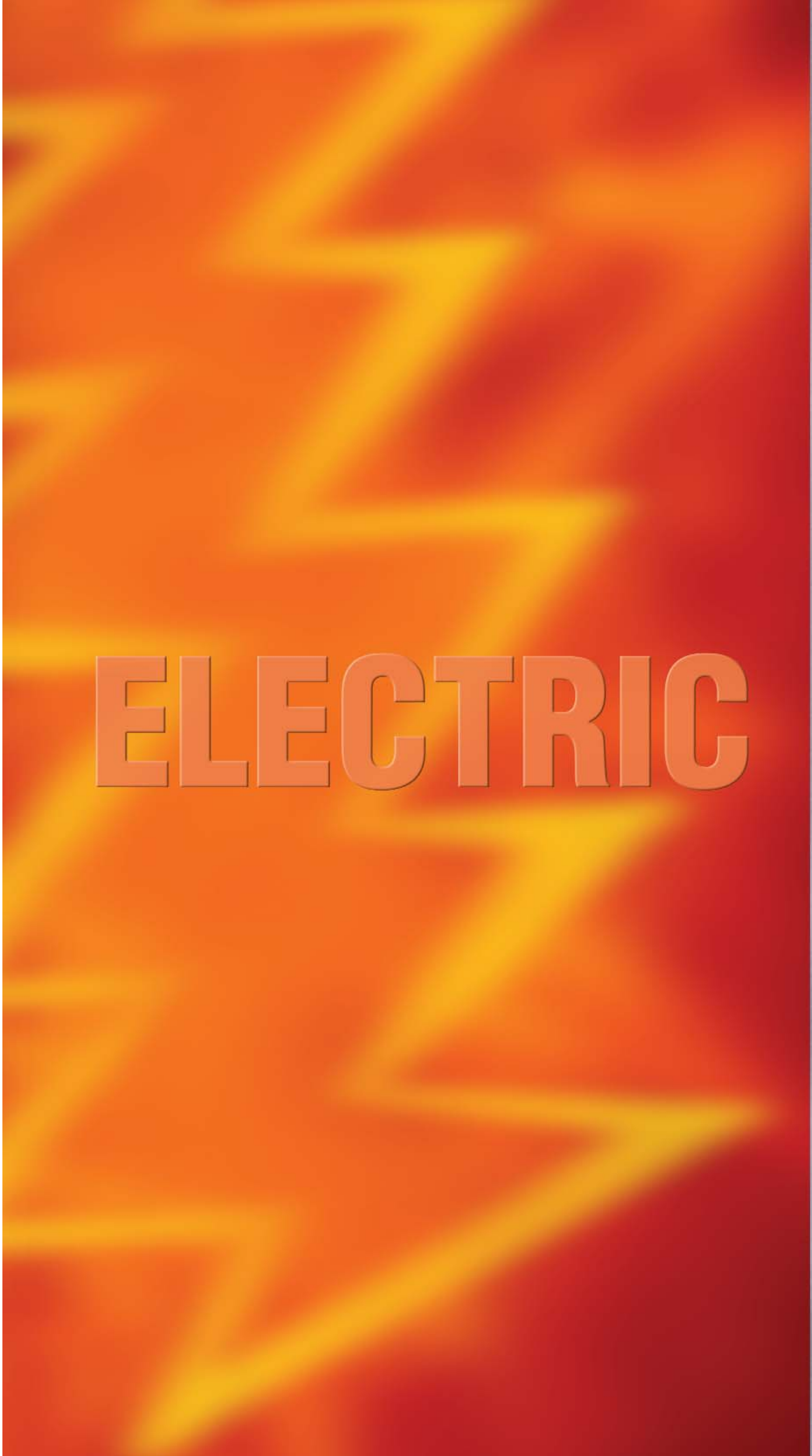

Electric Steam
Humidifiers

Armstrong

Armstrong®

HumidiClean Series HC-6000 Humidifier

Revolutionary ionic bed technology that carries a lot of weight

The Ionic Bed. The Final Resting Place Of Ordinary Humidifiers.

Brace yourself. The Armstrong HumidiClean™ is going to change everything you know about humidifiers. The process starts with an extraordinary technology that will make traditional humidifiers obsolete. Leave them dead in their tracks, you might say.

The ionic beds you see on this page are made of a fibrous medium: the ionic bed. There are six such beds per tank in a HumidiClean humidifier (more in the Models HC-6500 and HC-6700). They attract solids from the water as its temperature rises – minimizing the buildup of solids on inner tank walls and heating elements. So you have a humidifier that stays clean except, of course, for the ionic beds. And once they have absorbed their capacity of solids, the unit even tells you to change them. It takes about 15 minutes and is absolutely hassle free.

See For Yourself How Much HumidiClean Could Save Over Traditional Units

As Table 126-1 illustrates, maintaining a HumidiClean with patented ionic bed technology is more economical than caring for either traditional cleanable or non-cleanable electronic units. When you combine costs for labor and materials and calculate the differences for seasonal maintenance, the new Armstrong HumidiClean is the obvious winner.

But to get an idea of just how big your advantage could be, multiply your savings by the number of units you have and project your answer over a few years. Can you think of a better reason to choose HumidiClean? We can't either, but we can think of several more reasons.

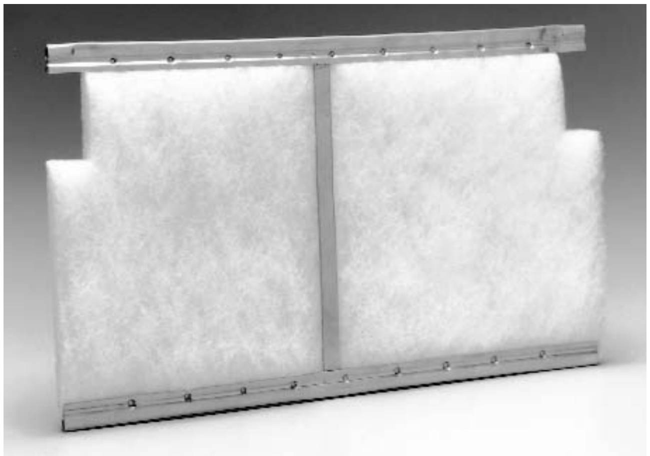

Table 126-1. Maintenance Cost Comparison

Maintenance cost comparison for a humidifying season using Model HC-6100. Results may vary depending on your parts and labor costs.

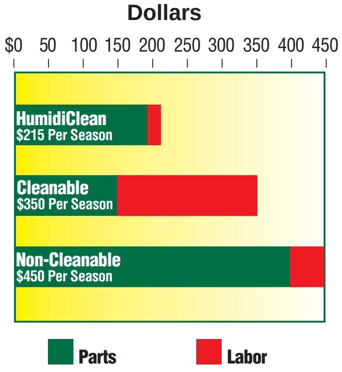

HumidiClean Passes No Current Through Water

HumidiClean's resistance-type design has a proven track record for safety. Totally different compartments keep plumbing completely separated from electrical components.

In addition, Armstrong has built several other safety features into HumidiClean. These include a key-locked access door, password protected programmable keypad, diagnostic indicating LCD display, continual-checking diagnostic routines, high- and low-water level detection, internal tank temperature sensing, overcurrent protection and connections for a Class 2 alarm device.

HumidiClean uses submersed electric heating elements to generate steam. In other words, water quality or conductivity do not affect the unit's ability to generate full output on demand. Although normally used with tap water, HumidiClean can, upon request, be installed with deionized, demineralized, softened or reverse osmosis water sources. Said another way: You get the benefit of a humidifier capable of operating over a wide range of water quality without frequent replacement of parts or bothersome, messy cleaning.

Less Scale Means Greater Efficiency

Capacity is the first victim of the scale that quickly builds up in traditional evaporative or steam-generating humidifiers. As scale gathers in the pan or on heating elements or electrodes, output declines. This gradually leads to a loss of humidity control. From this point on, things get steadily worse – until cleaning or the replacement of parts occurs.

HumidiClean with its remarkable ionic bed technology builds up deposits on its ionic bed inserts instead of tank walls or heating elements. As a result, it operates efficiently longer, its tank stays cleaner longer, and it maintains nearly maximum output throughout its service life.

Ionic Bed Technology Saves Energy

Because of carbonate buildup, most humidifiers drain every 20-45 minutes. HumidiClean's ionic beds attract these carbonates from water, so the primary reason to drain the tank is to eliminate sodium. Since this is typically only necessary approximately once every 12 hours, the unit wastes much less hot water,thereby saving energy dollars.

HumidiClean Series HC-6000 Offers Enhanced Control of Room RH

HumidiClean uses SCR controls as standard on all units for full modulation of steam output. The humidifier's responsiveness to increased demand is enhanced through the use of an aquastat to maintain a minimum water temperature in the tank during short periods of no demand. The unit also modulates fill of makeup water into the tank to prevent reduction of steam output during the fill cycle for consistent and responsive output of produced steam.

HumidiClean Communications Capability

HumidiClean Series HC-6000 offers native MODBUS communications protocol as well as a Class II alarm circuit for monitoring purposes. Optionally, HumidiClean may be ordered to operate with either BACnet or LonWorks protocols.

Why Humidify?

As the temperature of indoor air goes up, its relative humidity (RH) goes down. When RH falls to levels commonly found in heated indoor environments, moisture-retaining materials such as wood, paper, textile fibers and a wide range of food and chemicals begin to deteriorate.

Dry air can also increase static electricity buildup, potentially impacting production or the use of office equipment. Computer rooms, printing operations, clean rooms and laboratories are especially sensitive to static charges due to dry air. Low RH also affects indoor air quality.

Steam is virtually a sterile medium offering many sanitation benefits over other types of humidification. It is recommended for essentially all commercial, institutional and industrial applications.

Ionic Bed Technology

New ionic bed **After 400 hours** **After 800 hours**

These microscopic photos show how the ionic bed fibers (magnified 52.5X) collect solids throughout their service life. A new ionic bed weighs approximately 1/3 pound. When it reaches its capacity, an ionic bed may weigh more than 2-1/2 pounds. A light on the control panel indicates when to replace HumidiClean's beds.

How HumidiClean Works

When power is supplied to the unit, the water fill valve energizes, and water enters the tank. Once the level reaches the low-water switch, the heating elements are energized (assuming there's a call for steam output). The unit continues to fill until the high-water switch is energized. The humidifier then produces steam in response to the humidistat's input signal. The tank will fill at regular intervals if all conditions remain constant. Periodic tank drainage is based on active time of the heating elements, but may be field-adjusted to water conditions.

The HumidiClean power module accepts a proportional signal and, in response, pulses power to the heating elements to provide fully modulated output. Steam output is continuously adjusted to satisfy necessary humidity requirements.

The standard HumidiClean includes the Armstrong modulating control humidistat with a 0-10 Vdc control signal. The unit is field-adjustable to accept any of the following common control signals as the main control signal: on/off (SPST relay), 0-10 Vdc, 4-20 milliamp, 0-5 Vdc. Additional input terminals are provided for on/off air flow and duct high-limit humidity controls.

Completing A Service Life Cycle

After the ionic beds have absorbed 90% of their capacity, the LCD display will flash the "EOL" (end of life) message. (See control panel photo.) If the HumidiClean is not serviced by replacing the ionic beds and re-setting the EOL, the unit will continue to produce steam on demand for the remaining 10% of ionic bed capacity. During this period, the unit will display a flashing "EOL" message. After the ionic beds have reached 100% capacity, the unit will shut down by draining the tank and will not respond to any call for humidity. Servicing the unit is now required. The service life cycle is field-adjustable to accommodate varying water quality and the specifics of the individual application.

Simple Bed Removal

Toggle from "STEAM GENERATION" on the LCD to "MANUAL DRAIN". This will cause the unit to drain. When this drain is complete, turn the main power off at the disconnect. Use caution as tank will still be quite warm. Remove screws from outer cover. Remove wingnuts from access panel.
Remove old beds by pulling them up and off the holding pins in the tank, sliding them out through the access opening. Further cleaning of the tank or heating element surface is typically not required.

Install new beds in the same manner, sliding them through the access panel and positioning them on the holding pins. After all beds have been replaced, replace the tank access panel and outer cover. Turn the power on at the main power disconnect. Toggle to and reset EOL. Unit will fill with water and return to normal operation. Total service time is usually no more than 15 minutes. (Used ionic beds contain no environmentally hazardous material and may simply be thrown away.)

Drying Cycle

If there is no demand for steam for a continuous 72-hour period, HumidiClean initiates a routine to dry ionic beds by draining and energizing the heating elements for short intervals. This drying cycle eliminates standing water concerns and improves indoor air quality.

Series HC-6000 Control Panel

The HumidiClean control panel is designed to quickly and simply display operating conditions. If an error is detected, a diagnostic display indicates the specific condition.

Service As Easy As One, Two, Three

Step 1. Remove HumidiClean outer cover and remove tank access panel. Remove the old ionic bed inserts.

Step 2. Install new inserts in place of the old ones.

Step 3. Reinstall tank access panel and outer cover. Restart HumidiClean.

Selection and Ordering Procedure

Consider the following factors to select and order the proper unit.

1. Compute the capacity required.

You must compute the maximum amount of moisture required to determine that HumidiClean is properly sized for service.

For detailed information on calculating humidification loads, refer to the Humidification Engineering section of this catalog or Armstrong's Humid-A-ware™ humidification sizing and selection software. Both may be downloaded from Armstrong's web site at www.armstrong-intl.com. Humidification loads are generally sized on a worst-case basis where design conditions exist for a limited time and do not require a safety factor. HumidiClean is designed to drain infrequently, because accumulation of tank solids is not as problematic as with other humidifiers. This conserves water and energy. There will be a short period during this drain cycle when there will be no steam output. Consult your Armstrong Representative or the factory if this poses a control problem for your system.

Example: Assume the humidification load is 38 lbs/hr (17.3 kg/hr) and available power supply is 480 volt/3 phase. Referring to Table 133-3, Page 133, we find a 15 kW Model HC-6100 HumidiClean is required. The branch circuit should be rated for 25 amps. See Table 133-2, Page 133.

2. Specify electrical characteristics of unit required.

Specify the voltage, kW, phase and cycles for unit on the order. Determine total amperage for installation purposes.

3. Specify the humidity level and range.

The standard Armstrong humidistat is 0-10 Vdc control and is adjustable by a front-mounted dial from 5-95% RH. Specify room or duct type humidistat. Or you may provide your own humidistat and/or controller. If you are providing your own controller, specify control signal type.

4. Use proper connecting materials.

Two short hose cuffs per dispersion tube are provided to be used with 2" (nom.) hard copper tube to connect the tank to the steam dispersion tube (if applicable). Armstrong recommends using insulated copper tubing. The maximum recommended distance is 40 feet (12 meters) of equivalent length copper tubing. See Installation, Operation and Maintenance Bulletin 539 for additional guidelines.

5. Specify spare ionic bed inserts.

If HumidiClean is going to be in continuous service on a year-round basis, Armstrong recommends the purchase of a spare set of beds.

Duct Unit

6. Specify steam dispersion tube (Table 127-1).

Select the proper steam dispersion tube that meets the duct requirements. As an example, if the duct in which you are installing the humidifier has a width between 17" and 22", you should use the steam dispersion tube(s) D-1.5 (DL-1.5 for HC-6300, HC-6500 or HC-6700).

Alternatively, specify HumidiPack™ and indicate the following:
- Duct height and width
- CFM
- Duct air temperature
- Final duct RH%
- Non-wettable vapor distance available
- Maximum allowable air pressure drop (inches W.C.)

Figure 129-1. Dispersion Tube

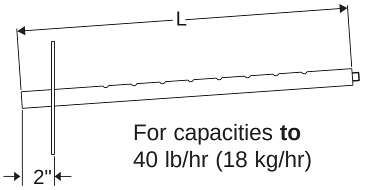

For capacities **to** 40 lb/hr (18 kg/hr)

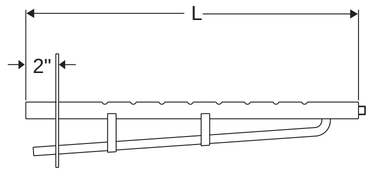

For capacities **above** 40 lb/hr (18 kg/hr)

Table 129-1. Selecting Proper Steam Dispersion Tube

Steam Disp. Tube Model #		Steam Disp. Tube Length		Duct Width				Weight	
HC6100, HC6100DI	HC-6300, HC-6300DI, HC-6500, HC-6500DI, HC-6700, HC-6700DI			Min.		Max			
		in	mm	in	mm	in	mm	lb	kg
D-1	DL-1	12	304	11	279	16	406	3	1.4
D-1.5	DL-1.5	18	457	17	432	22	559	3	1.4
D-2	DL-2	24	609	23	584	34	864	4	2
D-3	DL-3	36	914	35	889	46	1168	6	3
D-4	DL-4	48	1219	47	1194	58	1473	8	3.6
D-5	DL-5	60	1524	59	1499	70	1778	9	4
D-6	DL-6	72	1829	71	1803	82	2083	10	4.5
D-7	DL-7	84	2133	83	2108	94	2388	11	5
D-8	DL-8	96	2438	95	2413	106	2693	12	5.5
D-9	DL-9	108	2743	107	2718	118	2998	13	6
D-10	DL-10	120	3048	119	3023	130	3302	14	6.4

HC6100, HC6100DI Model "D" Diameter is 1-1/2".

HC6300, HC6300DI, HC6500, HC6500DI, HC6700, HC6700DI Model "DL" Diameter is 2-3/8".

Moels HC-6500 and HC-6700 require a minimum of two (2) dispersion tubes).

All dimensions and weights are approximate. Use certified print for exact dimensions. Design and materials are subject to change without notice.

7. Specify water source.

Specify if the service will include tap, deionized, demineralized, softened or reverse osmosis water.

8. Specify options required.

- **Duct high-limit humidistat.** (Recommended). You may order a duct high-limit stat. A typical setting for the high-limit stat is 85% RH. Stat opens when relative humidity exceeds settings. A modulating high-limit stat is also available for VAV systems.

Figure 130-1. HC-6100 or HC-6300 Duct Type Distribution

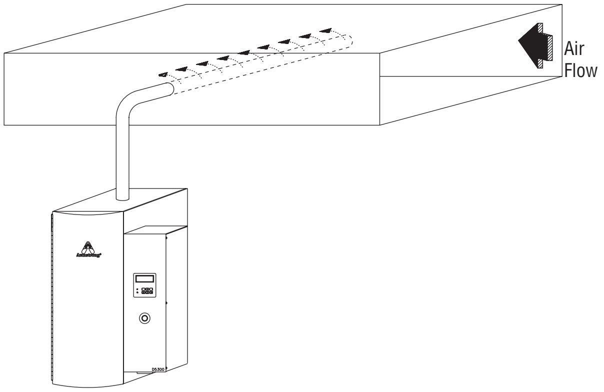

Figure 130-2. HC-6100 or HC-6300 with Duct Located below HumidiClean

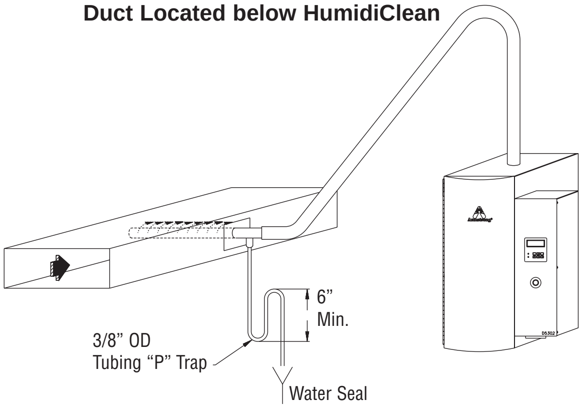

Figure 130-3. HC-6100 or HC-6300 with EHF-3 Fan Package Mounted on Wall

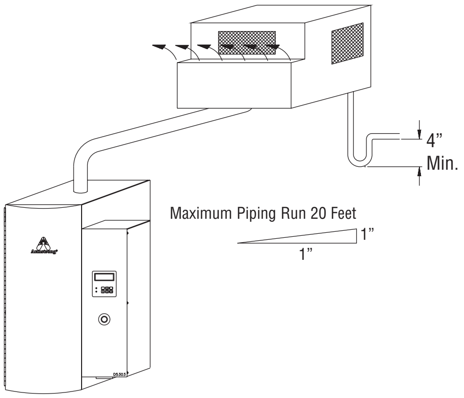

- **Fan interlock.** (Recommended). You may order a duct pressure switch to activate the humidifier by sensing air flow in a duct system. The pressure switch prevents humidifier operation if there is insufficient air movement in the duct system.

Area Unit

9. Specify a fan package for each HumidiClean.

The EHF-3 offers a remote mounted, direct area discharge option for use with HumidiClean (See Figure 128-3). EHF-3 offers capacities to 120 lbs/hr (54 kg/hr). A minimum of two EHF-3 fan units are required for Model HC-6500 or HC-6700. **Please consult factory when applying EHF-3 fan package with Model HC-6700.**

Figure 130-4. HC-6100 or HC-6300 HumidiClean Piped to HumidiPack

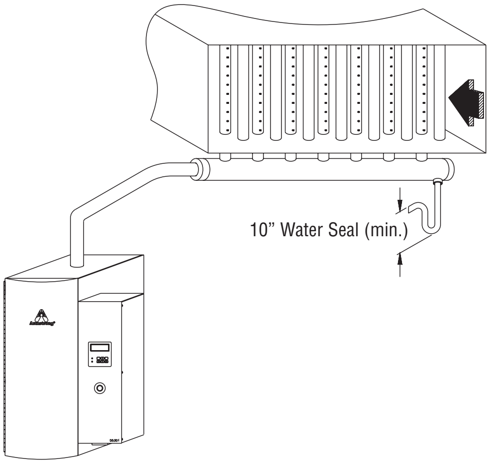

Figure 130-5. HC-6100 or HC-6300 General Installation Concept

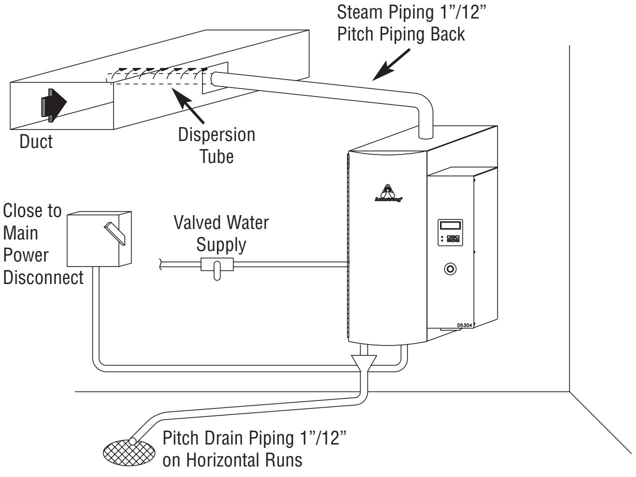

Electronic steam humidifiers must be installed in locations that allow routine inspection and accessibility for maintenance operations.

Do not place electronic steam humidifiers in locations where unusual instances of malfunction of the humidifier or the system might cause damage to non-repairable, unreplaceable or priceless property.

Duct Type Distribution

Where an existing duct system is available, steam is commonly discharged into the duct through a dispersion tube. Selection of the dispersion tube should meet the duct requirements in Table 129-1, Page 129. If the steam dispersion tube is to be located below the humidifier, install a drip leg with water seal (See Figure 130-2, Page 130).

Alternative for Shortened Non-Wettable Vapor Trail… HumidiPack™

Use of a traditional dispersion tube (See Figures 129-1, Page 129, 130-1 and 130-2, Page 130) typically provides satisfactory non-wettable vapor trail performance in duct applications with HumidiClean. However, for applications with particularly limited downstream absorption distance, HumidiPack may be considered. HumidiPack is a prefabricated separator/header and multiple dispersion tube assembly (See Figures 130-4, Page 130, and 131-1). It provides uniform distribution and a shortened non-wettable vapor trail. Refer to Page 82 of Bulletin 596 or contact your Armstrong Representative for more information.

Area Distribution Method

The Armstrong EHF-3 fan package provides humidity distribution where an air handling system is not available. The fan package (See Figure 130-3, Page 130) is designed to be hung on a wall to operate as a remote-mounted, direct area discharge option for use with HumidiClean. The EHF-3 incorporates a blower rated at 120 V-2.90 amps. CFM rating is 465. The standard fan package requires a separate 120 volt power supply. The EHF-3 can be used (upon request) with power supplied to HumidiClean through a step-down transformer.

Note: A minimum of two EHF-3 fan units are required for Models HC-6500 and HC-6700. **Please contact factory when applying EHF-3 fan packages to Model HC-6700.**

Note: Models HC-6500, HC-6500DI, HC-6700 and HC-6700DI are shipped as freestanding units. They are not intended to be wall mounted.

Note: For all Series HC-6000 units: Please contact factory for duct applications offering high static pressure (>4" W.C.) or velocities over 2,000 FPM. Avoid placing dispersion tubes in downward, high-velocity airflow. Please contact your local Armstrong representative with questions.

Figure 131-1.
HC-6500 or HC-6700 HumidiClean Piped to HumidiPack

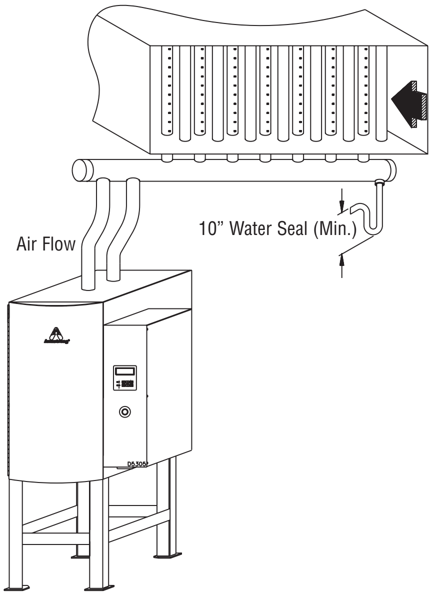

Figure 131-2.
HC-6500 or HC-6700
Duct Type Distribution with Dispersion Tubes

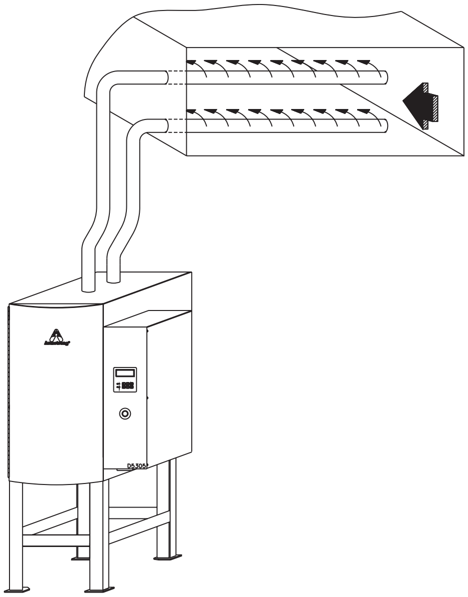

Suggested Specification for HumidiClean™ Series HC-6000

Steam humidifier for steam distribution of humidity (steam vapor) into air handling system or directly into space shall be of the self-contained, electrically controlled design.

A. Vapor shall generate steam from demineralized, deionized, reverse osmosis, softened, or ordinary tap water (specify DI model for DI or RO water)

B. Humidifier shall utilize disposable ionic bed inserts for tap water service to attract solids from boiling water. Ionic beds assist in ensuring control through responsive and consistent steam production regardless of water quality and minimize downtime required for tank cleaning.

C. Humidifier shall have all internal components contained in a steel cabinet with key-locked access doors to prevent unauthorized access.

D. Humidifier shall come standard with insulated, painted tank enclosure.

E. Humidifier shall monitor tank operating history, and display will indicate when unit needs ionic bed replacement. Service life cycle may be field adapted to match water quality.

F. Humidifier shall have SCR modulating control to provide 0%-100% of maximum capacity. Humidifier is field adaptable to utilize onboard PID controller for use with 0-5Vdc, 0-10Vdc, 4-20mA sensors or can accept an input signal from external controller/humidistat (0-5Vdc, 0-10Vdc, 4-20mA or on/off).

G. Tank drain shall cycle based on operating history in order to conserve water and energy. Drain cycle shall be field adjustable and drain will be tempered by the fill valve.

H. Humidifier includes end of season drain to empty tank during 72 hours of no demand. Tank pitched to assist with complete drainage.

I. Unit shall monitor tank water level and will shut down power to the heating elements to prevent unsafe operation upon failure of the drain system, fill system, or upon an overcurrent condition

J. Humidifier shall utilize a thermal sensing device that senses temperature within a heating element to prevent overheating.

K. Humidifier shall incorporate stainless steel conductance-actuated probes with Teflon insulation for liquid level control on tap water service. For deionized (DI) or reverse osmosis (RO) water, humidifier shall have float switches for liquid level control

L. Humidifier shall include a password protected programmable keypad with backlit alphanumeric display offering menu selectable diagnostics, ionic bed service life selection, and tank drain program.

M. Keypad functions to include:
   a. RH Graph of previous 30 days of trend data.
   b. Real Time Clock.
   c. Error list log showing all previous errors experienced in past 30 days, timed stamped.

N. Humidifier fill water line shall have an air gap to prevent back-flow (siphoning) of tank water into the potable water supply system

O. Humidifier shall modulate fill of makeup water into tank to prevent reduction of steam output during fill cycle for consistent and responsive output of produced steam

P. A minimum tank temperature to be maintained during short periods of no demand through use of an aquastat to improve responsiveness to increases of demand

Q. Humidifier shall incorporate electrical terminals for installation of controlling stat/sensor, duct high-limit stat/sensor, fan interlock switch, and Class 2 alarm device

R. Humidifier shall be supplied with integral Emergency Manual Stop for quick shut down.

S. Humidifier shall be supplied with stainless steel steam dispersion tube(s) which provide uniform steam distribution over the entire tube length and shall be supplied at various lengths (through 10') to adequately span the widest dimension of the airstream. Alternatively, humidifier shall be supplied with HumidiPack prefabricated separator/header and multiple dispersion tube assembly designed for the application in order to shorten the non-wettable vapor trail.

T. When applicable, humidifier shall have provisions for discharging steam vapor directly into room area using factory-available fan distribution units as an accessory. These units shall be designed for remote mounting from the humidifier.

U. Humidifier shall be supplied with hose cuffs for connection to hard copper tube (customer supplied). Stainless steel pipe required for DI/RO water.

V. Humidifier tank shall be constructed of 14 ga. 304 stainless steel and the heating elements shall include an incoloy sheath for tap water service or stainless steel sheath for RO (reverse osmosis) or DI (deionized) water.

W. Humidifier is interoperable through native MODBUS communications protocol. Upon request, humidifier may be supplied interoperable through BACnet or LonWorks communications protocol.

X. Additional options include VAV control (modulating high limit

All dimensions and weights are approximate. Use certified print for exact dimensions. Design and materials are subject to change without notice.

Physical Data, Capacities and Dimensional Drawings

Table 133-1. List Of Materials

Generator Tank	304 Stainless Steel	
Generator Tank Gasket	Closed Cell Sillicone	
Cabinet Material	18 Ga. Steel	
Cabinet Finish	Powder Coating	
Elements	Incoloy	
Ionic Bed Material	Inert Fiber	
Ionic Bed Frame	304 Stainless Steel	
Hose Cuffs	EPDM (Ethylene Propylene) Rubber	
Dispersion Tubes	Type 18-8 Stainless Steel	
Weights	**HC-6100/6300**	**HC-6500/6700**
Approx. Shipping Weight	176 lbs / 80 kg	330 lbs / 150 kg
Unit Weight - Dry	154 lbs / 70 kg	286 lbs / 130 kg
Maximum Operating Weight - Full	234 lbs / 106 kg	507 lbs / 230 kg
EHF-3 Fan Package	33 lb / 15 kg	33 lb / 15 kg *

*Minimum of (2) EHF-3 fan packages are required for the HC-6500 and HC-6700 units. **Please contact factory when applying EHF-3 fan packages to Model HC-6700.**

Table 133-2. Recommended Branch Circuits

Nominal Amp Rating	Wire (Gage)	MM2	Circuit Breaker
1 - 12	14	3	15
13 - 15	12	4	20
16 - 20	10	6	25
21 - 24	10	6	30
25 - 32	8	10	40
33 - 40	8	10	50
41 - 48	6	16	60
49 - 64	4	25	80
65 - 80	3	35	100
81 - 100	1	50	125
101 - 120	0	50	150
121 - 140	0	70	175
141 - 160	0	95	200

Table 133-3. Steam Capacities And Nominal Amp Ratings

Voltage (Vac)	Models HC-6100 and HC-6100DI			Models HC-6100 and HC-6100DI					Models HC-6300 and HC-6300DI			
	3 kW Unit			9 kW Unit			15 kW Unit		18 kW Unit		30 kW Unit	
	Nominal Amps		Steam Output	Nominal Amps		Steam Output	Nominal Amps	Steam Output	Nominal Amps	Steam Output	Nominal Amps	Steam Output
	Single Phase	Three Phase	lb/hr (kg/hr)	Single Phase	Three Phase	lb/hr (kg/hr)	Three Phase	lb/hr (kg/hr)	Three Phase	lb/hr (kg/hr)	Three Phase	lb/hr (kg/hr)
208	13.3	7.7	8.3 (3.8)	39	23	24 (11)	37	40 (18)	46	48 (22)	74	80 (36)
240	12.9	7.5	9.0 (4.1)	38	22	27 (12)	36	45 (20)	44	54 (25)	72	90 (41)
400	—	4.7		—	14		23		28		46	
480	—	3.8		—	11		18		22		36	
600	—	3		—	9		15		18		30	

Note: Capacities may vary in proportion to power supply.

Table 133-3. Continued. Steam Capacities And Nominal Amp Ratings

Voltage (Volts)	Model HC-6500 and HC-6500DI																	
	30 kW Unit			33.5 kW Unit			40 kW Unit			45 kW Unit			48 kW Unit			50.3 kW Unit		
	Nominal Amps	Steam Output		Nominal Amps	Steam Output		Nominal Amps	Steam Output		Nominal Amps	Steam Output		Nominal Amps	Steam Output		Nominal Amps	Steam Output	
	Three Phase	lb/hr	kg/hr	Three Phase	lb/hr	kg/hr	Three Phase	lb/hr	kg/hr	Three Phase	lb/hr	kg/hr	Three Phase	lb/hr	kg/hr	Three Phase	lb/hr	kg/hr
208	84	90	41	—	—	—	—	—	—	125	135	61	—	—	—	—	—	—
240	—	—	—	—	—	—	96	120	54	—	—	—	—	—	—	—	—	—
400	—	—	—	51	100	45	—	—	—	—	—	—	73	144	65	77	150	68
480	—	—	—	—	—	—	—	—	—	—	—	—	58	100	45	—	—	—
600	—	—	—	—	—	—	—	—	—	—	—	—	47	100	45	—	—	—

Note: Capacities may vary in proportion to power supply.

Table 133-4. Continued. Steam Capacities And Nominal Amp Ratings

Volts (Vac)	HC6500 and 6500DI				HC6700 and 6700DI			
	60 KW Unit		72KW Unit		67KW Unit		96 KW Unit	
	Rating Amps Three Phase	Steam Output lbs/hr (kg/hr)	Rating Amps Three Phase	Steam Output lbs/hr (kg/hr)	Rating Amps Three Phase	Steam Output lbs/hr (kg/hr)	Rating Amps Three Phase	Steam Output lbs/hr (kg/hr)
240	144	180 (82)	—	—	—	—	—	—
400	—	—	110	216 (98)	102	201 (91)	145	288 (130)
480	—	—	87		—	—	116	
600	—	—	70		—	—	93	

Note: Capacities may vary in proportion to power supply.

All dimensions and weights are approximate. Use certified print for exact dimensions. Design and materials are subject to change without notice.

Figure 134-1. Models HC-6100 and HC-6300

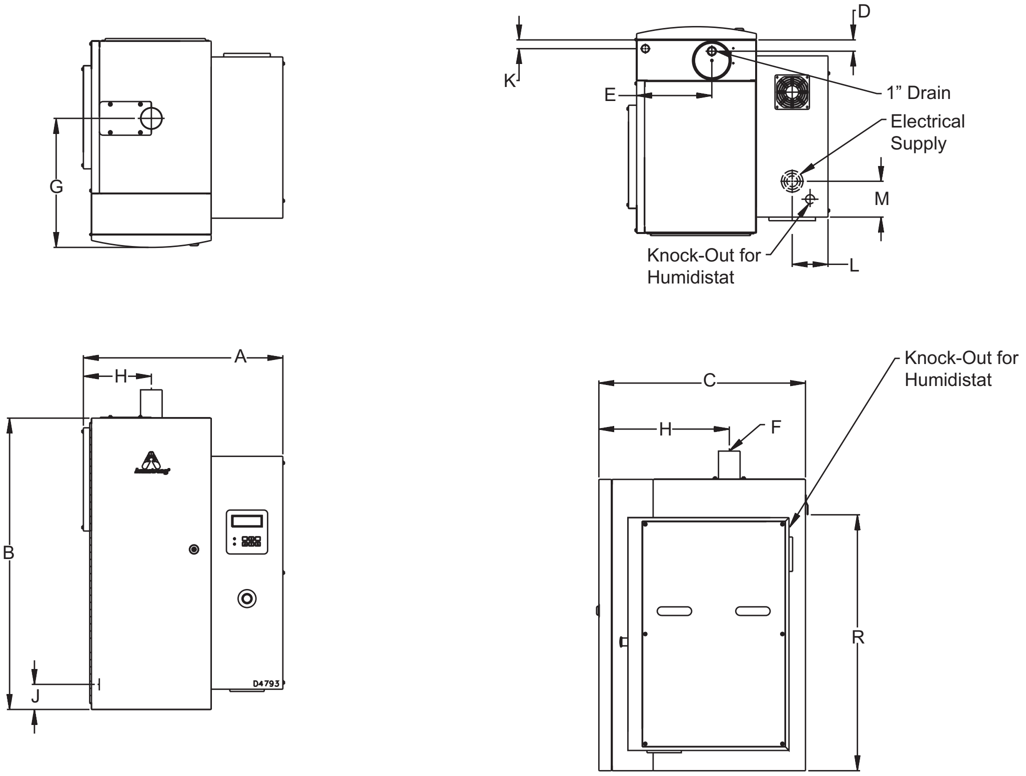

Table 134-1. Physical Data				
	HC-6100 and HC-6300		HC-6500, HC-6700 and HC-6700DI	
	Inches	mm	Inches	mm
"A"-Width	21-15/16	557	26	660
"B"-Height	32-1/16	814	56-3/18	1428
"C"-Depth	22-1/3	576	32-3/32	815
"D"-Drain - Back	20	508	29-3/16	748
"E" Drain - Side	9-1/8	232	11-1/2	293
"F"-Steam Discharge Tube	2-3/8	60	2-3/8	60
"G"-Steam Outlet - Side	7-1/2	190	9-1/2	241
"H"-Steam Outlet - Front	14-1/3	364	12-7/8	328
"J"-Supply Water - Bottom	1-27/32	47	1-7/8	47
"K"-Water Supply - Front	2-13/32	61	2-3/8	60
"L"-Electrical Supply - Side	18	457	22-1/16	560
"M"-Electrical Supply - Back	10-3/16	254	16-1/4	413
"Q"-Steam Dispersion Outlets	—	—	12-3/16	310
Water Supply Connection	3/8 compression fitting	10	1/2 compression fitting	12

Figure 135-1. Models HC-6500 and HC-6700 — Front, Side, Top Views

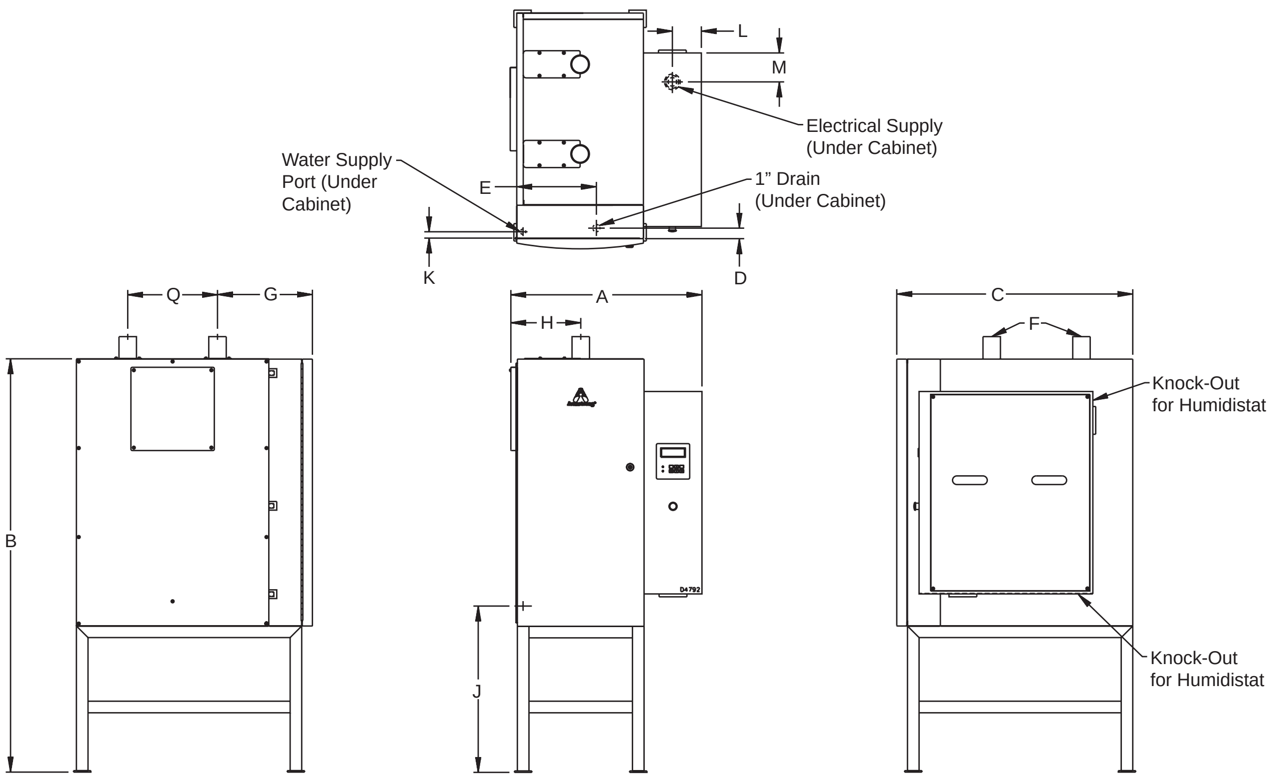

All dimensions and weights are approximate. Use certified print for exact dimensions. Design and materials are subject to change without notice.

Series EHU-700 Electronic Steam Humidifier

Accurate Humidity Control with Virtually No Manual Adjustment

The Armstrong EHU wraps up accurate control and reliability in a well-designed package that's just too smart to be imitated. No other electronic humidifier does a better job of stabilizing and simplifying humidity control. That's because only Armstrong offers full modulation and a patented self-regulating maximum output feature. It's an exclusive combination—and powerful peace of mind when it comes to humidification.

When you install an Armstrong Series EHU Electronic Steam Humidifier, you can forget about tiresome manual adjustment and messy trial-and-error maintenance. A free videotape (available upon request) clearly explains proper installation, operation and maintenance procedures. So you get accurate, automatically adjusted humidity control that's virtually hands-free.

Self-Diagnostics. Now, That's Smart…

Very sensible indeed. Internal software routines automatically monitor the operation of the HumidiMinder and display messages to indicate the condition. The unit will report on 10 different conditions.

The Series EHU Humidifiers come in conveniently sized models. The largest provides steam output up to 240 lb/hr. No matter which unit you choose, you'll get the benefits of Armstrong's more than 60 plus years of problem solving experience in steam humidification.

…And Sensible Protection, Too

Accurate, reliable humidity control is a sensible precaution to protect your investment in materials, equipment and personnel. Increasing the temperature of indoor air without adding moisture decreases its relative humidity (RH). And when RH falls to levels commonly found in heated indoor environments, moisture-retaining materials such as wood, paper, textile fibers and a wide range of food and chemicals begin to deteriorate.

Dry air can also increase static electricity buildup, which may actually sabotage production and office equipment. Computer rooms, printing operations, clean rooms and laboratories are especially sensitive to static charges due to parched air.

When humidity levels are not properly controlled, indoor air quality also suffers. According to ASHRAE Standard 62-1999 on indoor air quality: "…Relative humidity in habitable spaces preferably should be maintained between 30% and 60% relative humidity... Steam is preferred as a moisture source for humidifiers but care should be exercised to avoid contamination from boiler water or steam supply additives."

Indoor air quality, proper control of moisture output, efficiency and ease of maintenance. Since steam scores high on all of these factors, a steam humidifier is clearly the best choice. And an Armstrong EHU may just be the smartest.

How the Series EHU-700 Works

An Armstrong Series EHU converts ordinary tap water to steam and distributes it to bring the relative humidity up to the desired level. It's ideal for providing humidification where no steam is available or where a steam source is too remote for easy or economical piping.

The humidity demand, sensed by the humidistat, is indicated by the EHU demand display. A microprocessor converts this demand signal into an amperage requirement. The internal power contactor closes, applying voltage to the electrodes, and the fill valve begins to fill the tank.

Water enters the bottom of the steam generator tank and rises until it reaches the electrodes. Upon contact, electrical current flows through the water, causing it to boil and produce steam (Figure 137-1).

When the water level rises, as shown in Figure 137-2, increased electrical current flows through the water, producing more steam. This increase will continue until the required output of steam (i.e. amperage requirement) is reached.

At this point, the fill valve will cycle to maintain the required amperage. When the humidistat senses the added moisture in the air, the demand for humidity begins to drop. As the demand falls, the output of the unit modulates down by decreasing amperage, and therefore steam flow. The fill valve can then cycle at the lower steam output (amperage) requirement.

Figure 137-3 shows what happens when the humidistat demand signal drops below a minimum demand: The contactor is de-energized, and steam output stops.

A duct high-limit humidistat or an air flow interlock switch may also stop steam output. These devices prevent excess moisture and condensation in the duct. The Series EHU may also be used in combination with an Armstrong EHF-2 or EHF-3 Fan Package for direct area discharge of steam. A high-water float switch prevents water carryover into the duct due to too high a water level in the tank. An automatic drain cycle blows down mineral-laden water to extend tank life and reduce maintenance. An overcurrent protection circuit will drain water from the tank to reduce current flow and then de-energize the contactor to stop current flow if overcurrent still exists. After a period of no demand on the Series EHU-700, an "End of Season" drain is initiated to eliminate the potential for stagnant water to remain in the tank.

Figure 137-1. 100% demand.
Filling with water. Low, increasing steam output.

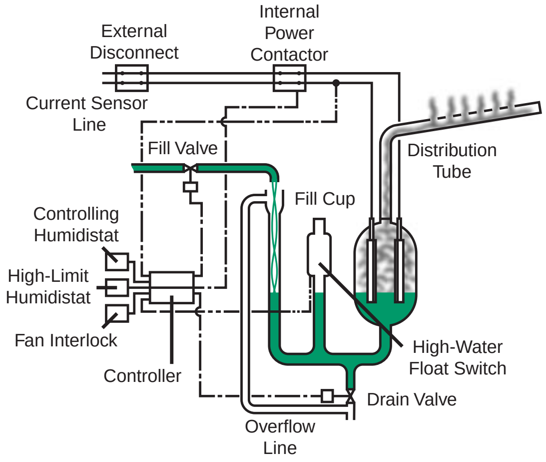

Figure 137-2. 100% demand. Fill valve cycling to maintain output. High water level. High, constant steam output.

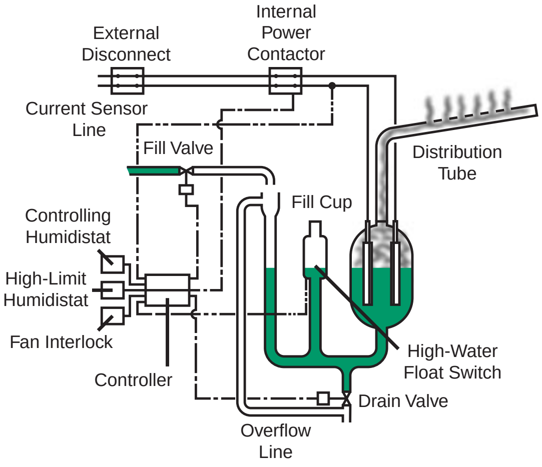

Figure 137-3. No demand.
Contactor opens. No steam output.

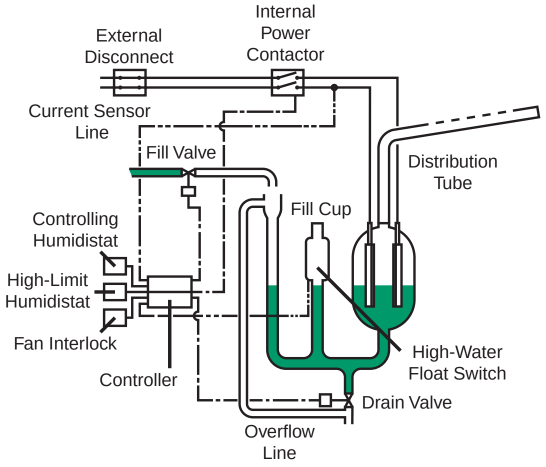

▨ Steam 🟩 Water

Self-Regulation Makes the Armstrong Series EHU-700 a Smart Choice

Standard full modulation stabilizes humidity.

As room humidity changes, the Series EHU-700 steam output changes to maintain set point. Since output varies with water level, the unit need only adjust the tank water level to achieve continuous modulating output (from 10% to 100% of capacity). Less efficient units simply turn on and off via a contactor in response to room changes. Due to its unique full modulating control feature, the output of the Armstrong Series EHU-700 is continuously adjusted to satisfy the necessary humidity requirements. Modulating control also means gradual increases in amperage.

Exclusive patented self-regulating maximum output improves control and consistency.

In low-demand situations, oversized units quickly shut down because a fraction of the output satisfies the requirement. This on/off behavior is called “hunting” because the unit never finds its set point. The EHU automatically adjusts maximum output in response to the operating history of the demand signal to virtually eliminate “hunting.” Working in conjunction with full modulation, this feature provides better control under varying demands—with no manual adjustment of maximum output required. See Chart 138-1.

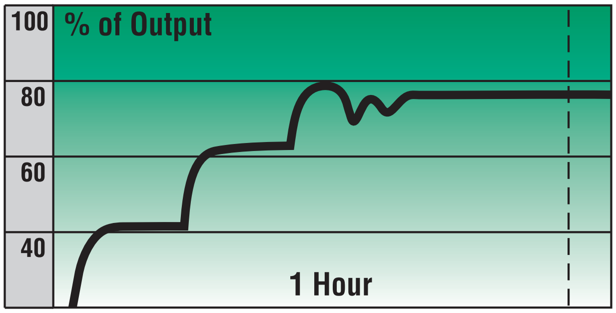

Chart 138-1. This chart represents the patented self-regulating maximum output of the EHU Series from start-up. To avoid hunting, the unit gradually increases capacity from 40% of maximum to 60% to 80%. In this case, the output satisfies the humidistat demand at a level below 80% of maximum capacity. The modulating feature then takes over and controls the unit output. The self-regulating maximum output can then adjust up (to 100% in this example) or down (to 60%) as demand history warrants. The feature intermittently “resizes” the humidifier’s maximum capacity to avoid hunting and to provide humidity control.

As we have seen, Series EHU-700 makes steam from ordinary tap water. That’s why they’re ideal for humidification when no steam source exists or when providing a steam humidifier would be too impractical or costly. They’re also ideal because they come with built-in Armstrong reliability, convenience and efficiency. See for yourself.

Standard built-in diagnostics simplify maintenance, eliminate guesswork.

Internal software routines constantly monitor operating history of the EHU to detect patterns of abnormal operation. For the Series EHU-700, standard built-in diagnostics detect small problems before they become big ones so you can minimize the cost and expense of repair and cleaning. And in the event of a serious malfunction—a plugged drain line, for example—the unit is designed to attempt corrections before automatically shutting down.

Cleanable tank combines economical maintenance and convenience.

You can easily disassemble and inspect the Series EHU-700's steam generating tank. And thanks to the Dirty Tank Indicator, you'll know when to do so. Software routines analyze the operating history of the Series EHU-700 over a long period of time to detect conditions that indicate a need for tank cleaning. When it is necessary, you have the option to clean the tank or replace it entirely.

Adapts easily to humidistat signals so it saves you money.

The standard unit includes the Armstrong modulating control humidistat. You can easily adjust the unit in the field to accept any of the following common control signals: on/off (SPST relay), 1.9-3.9 Vdc, 4-20 milliamp or 0-10Vdc as the main control signal. Additional input terminals are provided for on/off air flow and duct high-limit humidity controls. Advanced controls include a VAV controls package that can include a modulating high limit humidistat and outdoor temperature reset. The setpoint can be adjusted by a dial on the front cover.

Automatic drain timer balances efficiency and long operating life.

The Series EHU-700 automatically varies tank flushing based on the operating history and the water's mineral content (conductivity). The result? Positive, self-regulating mineral control that responds automatically to changes in mineral accumulation caused by changing water supply or water consumption due to varying steam output. For you, that means simple operation—no controls to set, no seasonal adjustment—and a long, efficient service life.

Why the Series EHU-700 is Easier to Troubleshoot and Maintain

Running diagnostics.

Standard software routines continually monitor operation and display coded messages indicating the condition.

Connections to an external alarm circuit are provided. Under "alarm" conditions noted, a relay contact closes, allowing activation of an external Class 2 device.

Input/Output (I/O) diagnostics.

Installation errors account for most start-up problems. The I/O circuit diagnostics can help pinpoint simple problems and avoid unnecessary service calls.

Installation/Operation Video.

A free video tape is available to help ensure proper installation, operation and maintenance. Contact factory.

Table 137-1. Diagnostic Display

Display	Interpretation	Unit Response
C00	Normal operation	
C01	High-water condition	Stop water fill
C02	Tank needs cleaning	Alarm
C03	Interlock circuit open	Power off to tank
C04	High-limit stat open	Power off to tank
C05	Drain system malfunction	Alarm and shutdown
C06	Fill system malfunction	Alarm and shutdown
C07	Overcurrent malfunction	Alarm and shutdown
C08	Manual tank shutoff	Power off to tank
C09	I/O diagnostics	Perform I/O display

Engage the I/O diagnostics by pressing "Mode Select" switch until "Diagnostic" mode indicator light illuminates. In sequence, the unit will automatically:

1. Actuate the fill valve, drain valve, contactor and the related indicator lights.
2. Read and display the controlling stat signal as a percentage of demand.
3. Check the interlock and high-limit stat circuits and display any fault conditions.
4. Return to previous operation condition and display % humidistat demand.

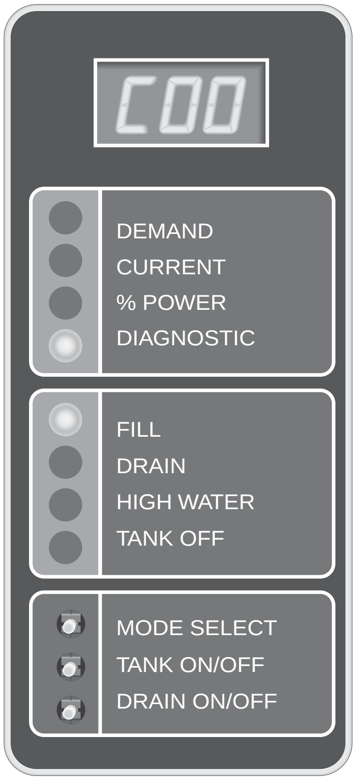

Methods of Steam Distribution

The Series EHU-700 is designed to provide maximum flexibility for steam distribution. Steam can be distributed through an air-handling system (normally an existing air duct) or directly into the area being humidified with the Armstrong EHF fan packages.

Duct-type distribution.

Where an existing air duct system is available, steam can be introduced into the duct through steam dispersion tube(s). (See Figure 140-2.)

The selection of the steam dispersion tube(s) should meet the duct requirements as noted in Table 140-1. As an example, if the air duct in which you are installing the humidifier has a width between 17” and 22”, you should use steam dispersion tube Model D-1.5. If the steam dispersion tube would be located below the humidifier (see Figure 140-3), install a drip leg with water seal.

Area distribution method.

The Armstrong EHF fan packages provide humidity distribution where an air-handling duct system is not available. The attractive EHF-2 unit may be installed directly on top of the Model EHU-600 or EHU-701 humidifier. The EHF-3 is designed to be direct mounted on a EHU-703. The EHF-2 and EHF-3 units may be hung on a wall and used in conjunction with any appropriate EHU humidifier.

The maximum humidity dispersion capacity of each EHF-2 area fan package is 30 lbs/hr (14 kg/hr). It incorporates a blower rated at 115 V-1.3 amp. CFM rating is 280 CFM @ 1,380 RPM.

The maximum humidity dispersion capacity of the EHF-3 unit is 120 lbs/hr (54 kg/hr). It incorporates a blower rated at 120 V-2.90 amp. CFM rating is 465 CFM @ 1,530 RPM.

The EHF-2 fan unit has an on-off switch that connects to the EHU and turns the humidifier on when the fan is on.

Note: The EHF-2 fan unit requires a separate 120 V power supply. The electrical power supply of the EHF-2 does not connect into the EHU humidifier.

The EHF-3 can be used (upon request) with power supplied to the EHU through a step-down transformer.

Figure 140-1. EHU Dispersion Tube and EHU Dispersion Tube with Drain Tube.

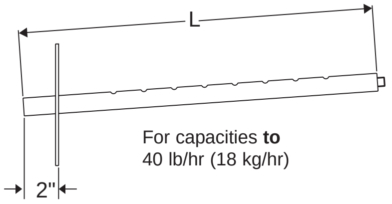

For capacities **to** 40 lb/hr (18 kg/hr)

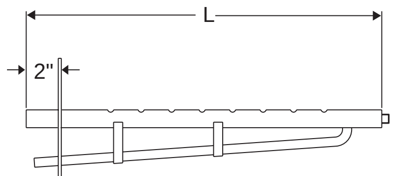

For capacities **above** 40 lb/hr (18 kg/hr)

Figure 140-2. Duct-type distribution.

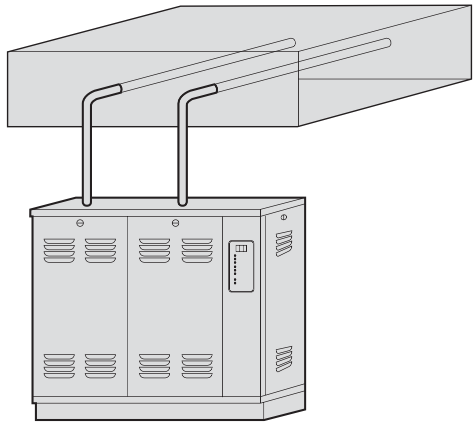

Table 140-1. Selecting Proper Steam Dispersion Tube

Steam Disp. Tube Model No.	Steam Disp. Tube Length		Duct Width				Weight	
			Min.		Max.			
	in	mm	in	mm	in	mm	lb	kg
D-1	12	304	11	279	16	406	3	1.4
D-1.5	18	457	17	432	22	559	3	1.4
D-2	24	609	23	584	34	864	4	2
D-3	36	914	35	889	46	1168	6	3
D-4	48	1219	47	1194	58	1473	8	3.6
D-5	60	1524	59	1499	70	1778	9	4
D-6	72	1829	71	1803	82	2083	10	4.5
D-7	84	2133	83	2108	94	2388	11	5
D-8	96	2438	95	2413	106	2693	12	5.5
D-9	108	2743	107	2718	118	2998	13	6
D-10	120	3048	119	3023	130	3302	14	6.4

See Figure 140-1. When unit has maximum capacity of above 40 lbs/hr (18 kg/hr), use steam dispersion tube with 1/2" drain.

Figure 140-3. Model EHU-703 with steam dispersion tube located below humidifier.

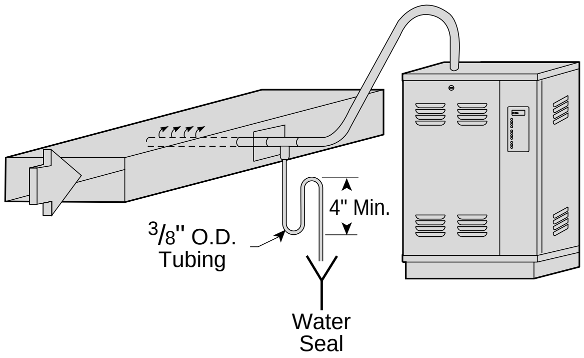

All dimensions and weights are approximate. Use certified print for exact dimensions. Design and materials are subject to change without notice.

Selection and Ordering Procedures for Series EHU-700

The following factors must be considered in the selection and ordering of the proper unit.

1. Capacity required.

You must compute the maximum amount of moisture required to determine which size unit is necessary.

Refer to the Humidification Engineering section of this catalog or Armstrong's Humid-A-ware™ Humidification Sizing and Selection Software (can be downloaded at www.armstronginternational.com) for detailed information on calculating humidification loads. Humidification loads are generally sized on a worst case basis where design conditions exist for a limited time, and do not require a safety factor. Output ratings for EHU humidifiers are average output. It is normal for steam output to decrease during and immediately following drain cycles. Consult your Armstrong Representative or the factory if this poses a control problem for your system.

Example: Assume the humidification load is 45 lbs/hr, and the available power supply is 480 V 3-phase. Starting at the top of the capacity table (Table 142-1, Page 142) and going down the 480 V column, we find the EHU-703 is required. Reading to the left, we find that current module CM 20 is needed, and the branch circuit should be rated for 25 amps.

2. Specify electric characteristics of unit required.

Specify the voltage, phase and cycles for unit on the order. Total amperage must be determined for installation purposes. (See Capacity Table142-1, Page 142.)

3. Standard humidistat sensing range is 10-90% RH.

Specify room- or duct-type humidistat. Or you may provide your own humidistat and/or controller.

4. Use proper connecting materials.

Two short hose cuffs are provided (four with the EHU-704) to be used with hard copper tube to connect the generator tank to the steam dispersion tube. Armstrong recommends using insulated copper tubing. If requested, flexible hose is available (for model EHU-701) in 10-foot lengths for installations which require flexibility. **The maximum recommended distance for running copper tubing is 40 feet equivalent pipe length. See Bulletin 527 for additional information.**

5. Specify spare steam generator.

If the humidifier is going to be in continuous service on a year round basis, Armstrong recommends the purchase of a spare steam generator to minimize the service interruption during inspection or cleaning.

Duct Unit

6. Specify steam dispersion tube (Table 140-1, Page 140).

Select the proper steam dispersion tube that meets the duct requirements. As an example, if the air duct in which you are installing the humidifier has a width between 17" and 22", you should use steam dispersion tube Model D-1.5.

7. Specify options required:

■ Duct high-limit stat (recommended). You may order a duct high-limit stat. A typical setting for the high-limit stat is 85 percent RH. Stat opens when relative humidity exceeds setting.

■ Fan interlock (recommended). A duct pressure switch may be ordered to activate the humidifier by sensing airflow in a duct system. The pressure switch prevents humidifier operation if there is insufficient air movement in the duct system.

Note: Please contact factory for duct applications offering high static pressure (>4" WC) or velocities over 2000 FPM. Avoid placing dispersion tube in downward, high velocity airflow.

Area Unit

8. Specify the EHF fan package.

Be sure fan package's capacity matches unit's capacity.
EHF-2 up to 30 lbs/hr (14 kg/hr).
EHF-3 up to 120 lbs/hr (54 kg/hr).

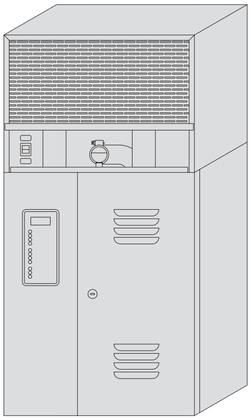

Figure 141-1. EHF-2 fan package mounted on EHU-701.

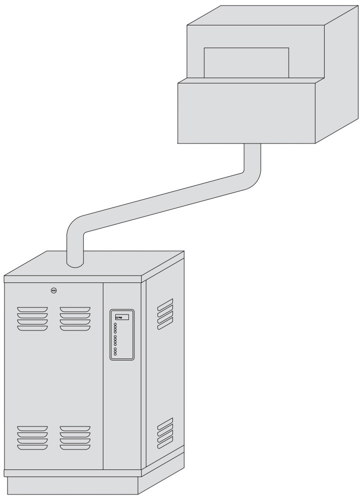

Figure 141-2. EHF-3 fan package mounted on wall above EHU-703.

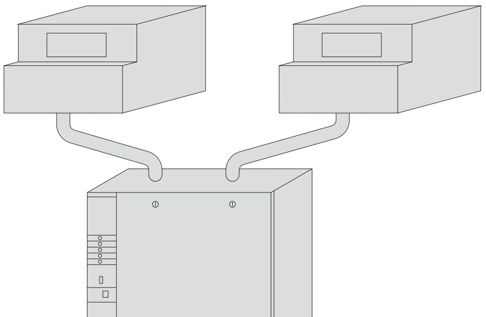

Figure 141-3. Two EHF-3 fan packages mounted on wall above EHU-704.

Series EHU-700 Capacities and Electrical Ratings

Table 142-1. Series EHU-700 Capacities and Electrical Ratings

Nom Amp Rating	Current Module	Recommended Branch Circuit		Output Per Hour @ Voltage Shown																					
				Single Phase								Three Phase													
		Wire	Circuit Breaker	120		208		240		277		208		240		346[1]		380		415[2]		480		600	
				lb	kg	lb	kg	lb	kg	lb	kg	lb	kg	lb	kg	lb	kg	lb	kg	lb	kg	lb	kg	lb	kg
EHU-701 Humidifier (One Small Steam Generator)																									
7	CM 7	14	15	2	0.9	4	1.8	5	2.3	6	2.7	7	3.2	8	3.6	12	5.4	13	6	15	6.8	17	7.7	21	9.5
12	CM 12	14	15	4	1.8	7	3.2	8	3.6	10	4.5	12	5.4	14	6.3	21	9.5	23	10.4	25	11.3	29	13.2	36	16.3
14	CM 14	12	20	5	2.3	8	3.6	10	4.5	11	5	15	6.8	17	7.7	24	10.9	27	12.2	29	13.2	34	15.4	42	19
16	CM 16	12	20	6	2.7	10	4.5	11	5	13	6	17	7.7	19	8.6	28	12.7	30	13.6	33	15	38	17.2	—	—
20	CM 20	10	25	—	—	12	5.4	14	6.3	16	7.3	21	9.5	24	10.9	35	15.9	38	17.2	42	19	—	—	—	—
24	CM 24	10	30	—	—	14	6.3	17	7.7	19	8.6	25	11.3	29	13.2	42	19	—	—	—	—	—	—	—	—
32	CM 32	8	40	—	—	19	8.6	22	10	26	11.8	33	15	38	17.2	—	—	—	—	—	—	—	—	—	—
40	CM 40	8	50	—	—	24	10.9	28	12.7	32	14.5	42	19	—	—	—	—	—	—	—	—	—	—	—	—
EHU-703 Humidifier (One Large Steam Generator)																									
20	CM 20	10	25	—	—	12	5.4	14	6.3	16	7.3	21	9.5	24	10.9	35	15.9	38	17.2	42	19	48	21.8	60	27.2
24	CM 24	10	30	—	—	14	6.3	17	7.7	19	8.6	25	11.3	29	13.2	42	19	46	20.9	50	22.7	58	26.3	72	32.7
32	CM 32	8	40	—	—	19	8.6	22	10	26	11.8	33	15	38	17.2	55	24.9	61	27.7	66	29.9	77	34.9	96	43.5
40	CM 40	8	50	—	—	24	10.9	28	12.7	32	14.5	42	19	48	21.8	69	31.3	76	34.5	83	37.6	96	43.5	120	54.4
48	CM 48	6	60	—	—	29	13.2	33	15	39	17.7	50	22.7	58	26.3	83	37.6	91	41.3	100	45.4	115	52.2	—	—
EHU-704 Humidifier (Two Large Steam Generators)																									
40	CM 20	8	50	—	—	24	10.9	28	12.7	32	14.5	42	19	48	21.8	69	31.3	76	34.5	83	37.6	96	43.5	120	54.4
48	CM 24	6	60	—	—	29	13.2	33	15	39	17.7	50	22.7	58	26.3	83	37.6	91	41.3	100	45.4	115	52.2	144	65.3
64	CM 32	4	80	—	—	39	17.7	45	20.4	51	23.1	67	30.4	77	34.9	111	50.3	122	55.3	133	60.3	154	69.8	192	87.1
80	CM 40	3	100	—	—	48	21.8	56	25.4	64	29	83	37.6	96	43.5	138	62.6	152	68.9	166	75.3	192	87.1	240	108.8
96	CM 48	2	125	—	—	58	26.3	67	30.4	77	34.9	100	45.4	115	52.2	166	75.3	182	82.5	199	90.2	230	104.3	—	—

NOTES: [1] 346 Volt units require 346/200 volt 4-wire system.
[2] 415 volt require 415/240 volt 4-wire system.
KW rating = humidity output (lbs/hr) x 0.345 (for energy calculations only; not for branch circuit sizing).

Suggested Specification for Series EHU-700

Steam humidifier for distribution of humidity (steam vapor) into air-handling system or directly into space shall be of the self-contained, electrically controlled design.

A. Humidifier shall generate steam from ordinary tap water.

B. Humidifier(s) shall have all internal components contained in a steel cabinet with a key-locked access door to prevent unauthorized access.

C. Humidifier shall have modulating control to provide 10% to 100% capacity.

D. Maximum capacity of humidifier shall self regulate with no manual adjustment.

E. Humidifier shall have tanks that can be taken apart for inspection, cleaning and, if needed, repair. Alternatively, the same tank can be disposed of and replaced. The humidifier shall monitor the tank and the display will indicate when it is dirty and needs cleaning or replacing.

F. Drain cycle will be self regulating both in frequency and duration to maximize tank life while minimizing energy waste. The drain cycle will automatically control mineral buildup based on water conductivity, humidity demand history and steam output rate. Drain water will be tempered by the fill valve.

G. Humidifier shall include “End of Season” drain.

H. Humidifier shall have programmed diagnostics to display input and output circuit status.

I. Humidifier shall have continuous self diagnostics checking to monitor the operation of the unit. The unit will shut down the tank (current to electrodes) to prevent unsafe operation and a visual display code will indicate cause of failure. Causes of failure include drain system malfunction, fill system malfunction and overcurrent malfunction.

J. Humidifier shall incorporate a high-water float switch to mechanically sense a high-water condition. A high-water probe that electrically senses high water will not be acceptable.

K. Humidifier will provide a relay contact closure to indicate a system failure or dirty tank condition. The contact closure will allow for activation of an external Class 2 alarm device (customer supplied). Circuit is rated to 1 ampere.

L. Humidifier will have a digital display to monitor unit amperage draw, humidistat demand percentage, steam output (as a percentage) and diagnostic codes. The display mode will be user selectable. Lights will indicate fill and drain valves operation, tank off, high water and display mode selected.

M. The humidifier fill water line(s) shall have an air gap to prevent backflow (siphoning) of contaminated water into the water supply system.

N. Humidifier shall incorporate electrical terminals for installation of controlling stat, duct high-limit stat, fan interlock switch, and Class 2 alarm device.

O. Humidifier shall be supplied with stainless steel steam dispersion tube(s) which provide uniform steam distribution over the entire tube length and shall be supplied at various lengths (through 10’) to adequately span the widest dimension of the duct.

P. When applicable, humidifier(s) shall have provisions for discharging steam vapor directly into room area using factory available fan distribution units as an accessory. These units shall be designed for either remote mounting or fit directly on top of humidifier.

Q. Humidifier shall be supplied with two hose cuffs for connection to hard copper tube (customer supplied).

R. Humidifier shall be supplied with a humidistat capable of modulating the steam flow, or be capable of working with the following common control signals without factory modification: 2-10 Vdc, 4-20 milliamp and on/off control (SPST relay).

Dimensional Drawings and Physical Data for Series EHU-700

Table 144-1. Materials and Weights

Materials	EHU-701	EHU-703	EHU-704
Generator Tank	Polypropylene		
Cabinet Material	16 ga Steel	16 ga Top & Bottom; 18 ga Sides; Steel	
Cabinet Finish	Baked-On Epoxy Enamel Coating		
Electrodes	Type 430 Stainless	Galvanized Carbon Steel	
Hose Cuffs	EPDM (Ethylene Propylene) Rubber		
Dispersion Tube	Type 18-8 Stainless Steel		
Duct Model			
Dispersion Tube	Type 18-8 Stainless Steel		
Area Fan Unit Model EHF-2 and 3			
Cabinet	Steel - 18 ga. with Epoxy Enamel Coating		
Blower Fan EHF-2	120 VAC, 60 Hz., 1.3 amp 280 CFM @ 1,380 RPM		
Blower Fan EHF-3	120 VAC, 50/60 Hz., 2.9 amp 465 CFM @ 1,530 RPM*		

Weights

Model No.	Approximate Shipping Weight		Maximum Operating Weight	
EHU-701	60 lb	27 kg	80 lb	36 kg
EHU-703	83 lb	38 kg	113 lb	51 kg
EHU-704	95 lb	43 kg	158 lb	72 kg
EHF-2 Package	33 lb	15 kg	32 lb	15 kg
EHF-3 Package	34 lb	15 kg	33 lb	15 kg

*208, 240, 480 and 600 VAC available

Table 144-2. Physical Data

	EHU-701		EHU-703		EHU-704	
	in	mm	in	mm	in	mm
"A" Width	18	457	19-1/2	495	33-1/2	851
"B" Height	23	584	31	787	31	787
"C" Depth	11-1/2	292	14	356	14	356
"D" Tank Drain (Side)	6-5/8	168	3-1/4	83	3-1/4	83
"E" Tank Drain (Front)	10-5/16	262	14-3/4	375	14-3/4	375
"G" Tank #2 Drain	N/A	N/A	N/A	N/A	28-3/4	730
"H" Steam Outlet #1	12-1/2	318	12-1/2	318	12-1/2	318
"I" Steam Outlet #2	N/A	N/A	N/A	N/A	14	356
"J" Supply Water (Side)*	8-1/4	210	9-1/4	235	9-1/4	235
"K" Supply Water (Front)	15-1/2	394	3-3/4	95	3-3/4	95
"L" Electrical Power (Side)	3-1/8	79	2	51	2	51
"M" Electrical Power (Front)	4-1/2	114	2-1/2	64	2-1/2	64
"N" Fan Height (EHF-2)	13	330	N/A	N/A	N/A	N/A
"N" Fan Height (EHF-3)	16	406	16	406	16	406

*Water connection is 3/8" (10 mm) copper compression fitting.

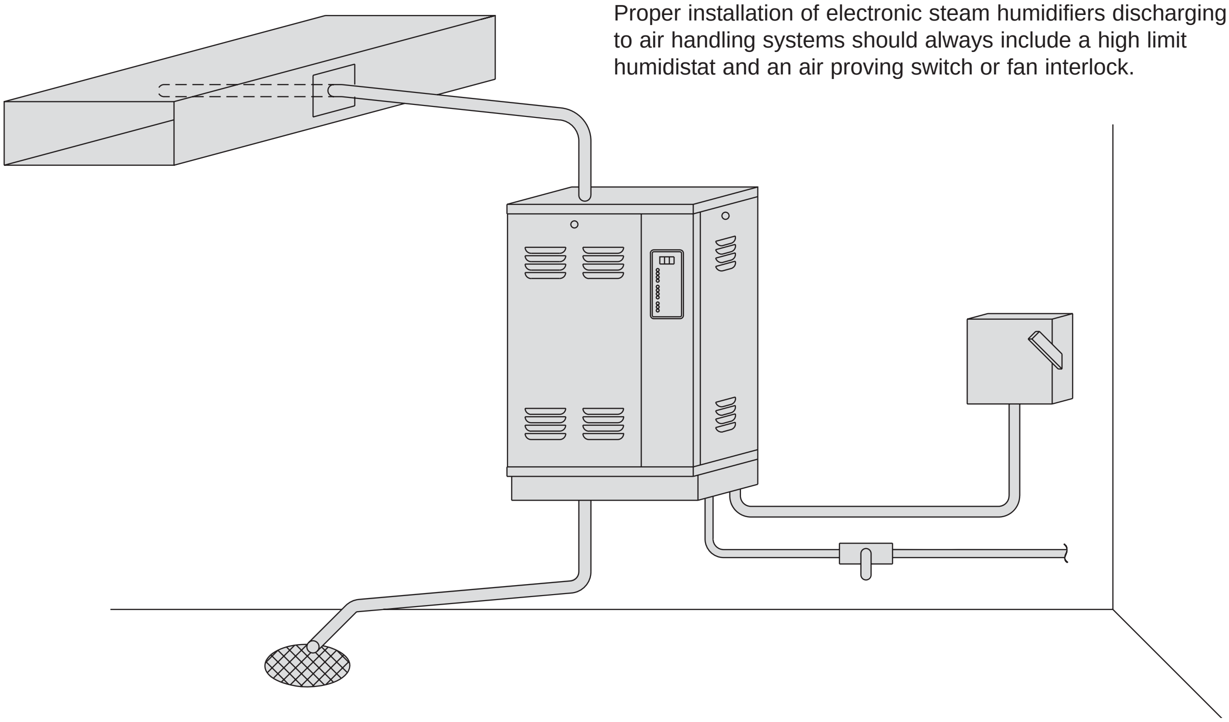

Figure 144-1. General Installation Concept

Electronic steam humidifiers must be installed in locations that allow routine inspection and accessibility for maintenance operations.

Do not place electronic steam humidifiers in locations where unusual instances of malfunction of the humidifier or the system might cause damage to non-repairable, unreplaceable, or priceless property.

Proper installation of electronic steam humidifiers discharging to air handling systems should always include a high limit humidistat and an air proving switch or fan interlock.

All dimensions and weights are approximate. Use certified print for exact dimensions. Design and materials are subject to change without notice.

Figure 145-1. Model EHU-701 with EHF-2 Fan Package — Front View

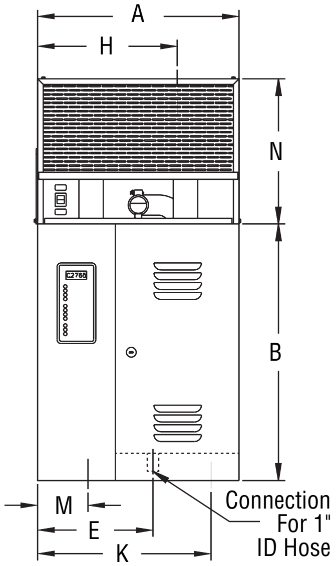

Figure 145-2. Model EHU-701 with EHF-2 Fan Package — Side View

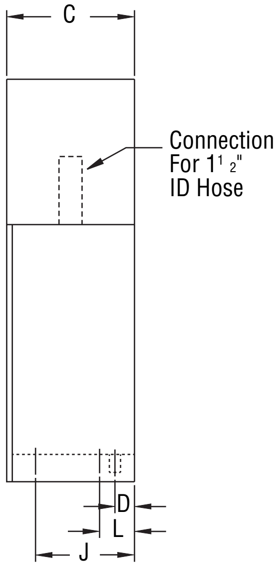

Figure 145-3. Model EHU-703 — Front View

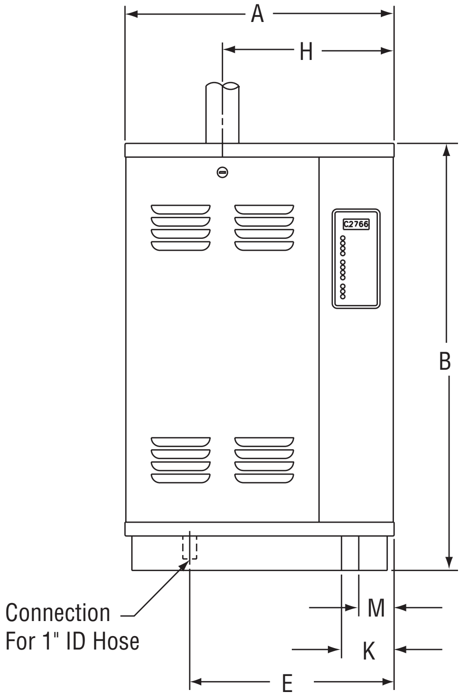

Note: The EHF-3 is a **remote mounted** direct discharge unit.

Figure 145-4. Model EHU-704 — Front View

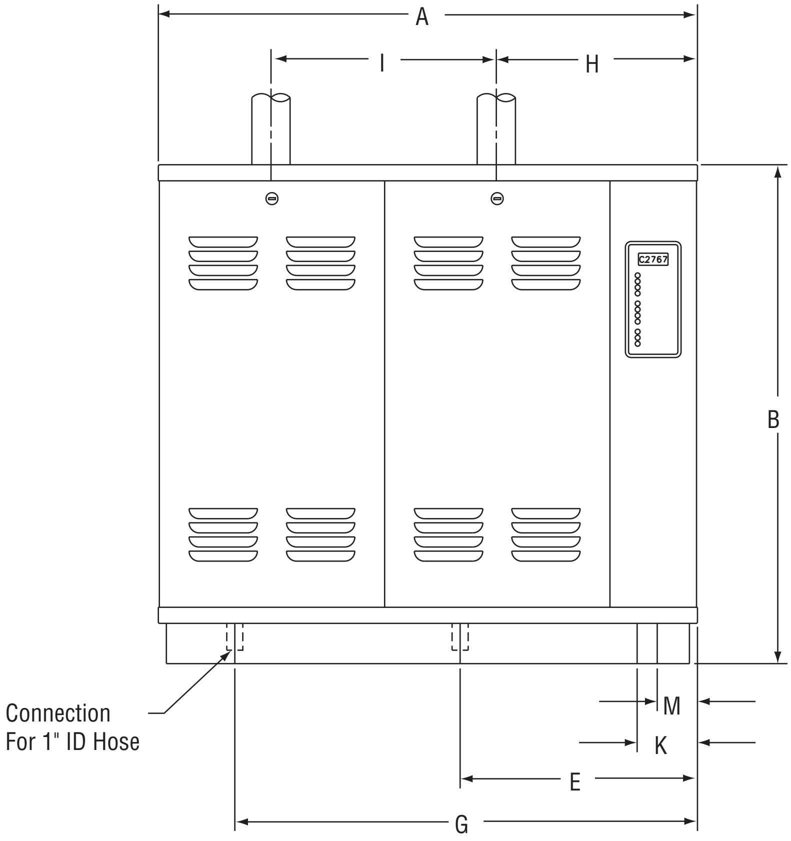

Figure 145-5. Model EHU-703 and 704 — Side View

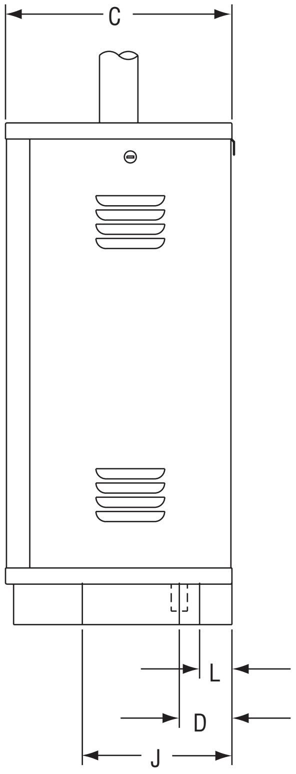

All dimensions and weights are approximate. Use certified print for exact dimensions. Design and materials are subject to change without notice.

Armstrong® Notes

Specialized Steam
Dispersion Methods

SPECIALIZED STEAM DISPERSION METHODS

Armstrong

Standard Manifolds for Series 9000/1000

Standard steam jacketed manifolds should be used if you are using the Series 9000/1000 direct steam injection humidifiers, and vapor absorption distance is not critical, or less than 36 inches. The size and number of manifolds can be determined by face area of the duct or AHU, capacity, steam pressure, and required absorption distance. Armstrong's Humid-A-ware™ Humidification Selection and Sizing software will assist in these calculations and can be downloaded from www.armstronginternational.com.

If multiple manifolds are to be used, it would be more economical to use reduced sized manifolds. Maximum capacity of an individual manifold is based on the steam supply pressure of the system.

What size manifolds are required?

Reduced size manifolds can be used when the following guidelines are adhered to:

1. The separator steam supply must be piped directly to the separator and not to be routed through the manifold jackets.
2. The manifold jacket piping system must be trapped and piped separately from the steam separator chamber. Reduced pipe size may be used (3/4" piping is sufficient in most cases) on manifold jacketing.
3. Manifold sizes are determined by the steam capacity method:

$$\text{Required manifold capacity} = \frac{\text{Separator capacity}}{\text{No. of Manifolds}}$$

Figure 148-1.

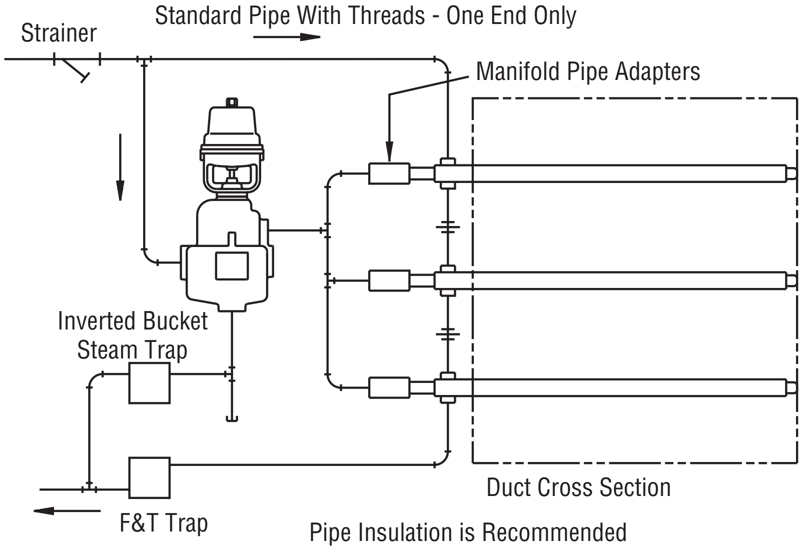

Table 148-1. Size 91, Continuous Discharge in lb. of Steam Per Hour Per Manifold

Steam Pressure, psig																						
2	3	4	5	6	7	8	9	10	11	12	13	14	15	20	25	30	35	40	45	50	55	60
75	75	75	75	75	76	82	93	97	105	110	115	122	126	150	171	191	212	233	255	272	303	316

Table 148-2. Size 92, Continuous Discharge in lb. of Steam Per Hour Per Manifold

Steam Pressure, psig																						
2	3	4	5	6	7	8	9	10	11	12	13	14	15	20	25	30	35	40	45	50	55	60
250	250	250	250	250	250	250	250	250	250	250	250	250	250	250	268	300	334	367	399	428	462	486

Table 148-3. Size 93, Continuous Discharge in lb. of Steam Per Hour Per Manifold

Steam Pressure, psig																						
2	3	4	5	6	7	8	9	10	11	12	13	14	15	20	25	30	35	40	45	50	55	60
450	450	450	450	450	450	450	450	450	450	464	195	510	524	635	740	827	931	1017	1103	1195	1281	1366

Armstrong ManiPack Steam Distribution Manifold Assembly

Application Considerations

The ManiPack is designed for applications where it is desirable to use multiple steam distribution manifolds to achieve a downstream non-wetting distance (i.e. “vapor trail”) as short as three feet. For non-wetting distances less than three feet, the Armstrong HumidiPack or HumidiPackPlus should be considered. Calculation of the non-wetting distance can be performed with the Armstrong Humid-A-ware Humidification Sizing and Selection Software which can be downloaded from www.armstronginternational.com.

Steam jacketing is desirable because it improves steam quality and reduces the chance of spitting or dripping condensate into the air handling system. For applications that are sensitive to duct heat gain, it is advisable to keep steam-jacketing pressures below 20 psig.

Figure 149-1. Typical Piping Configuration

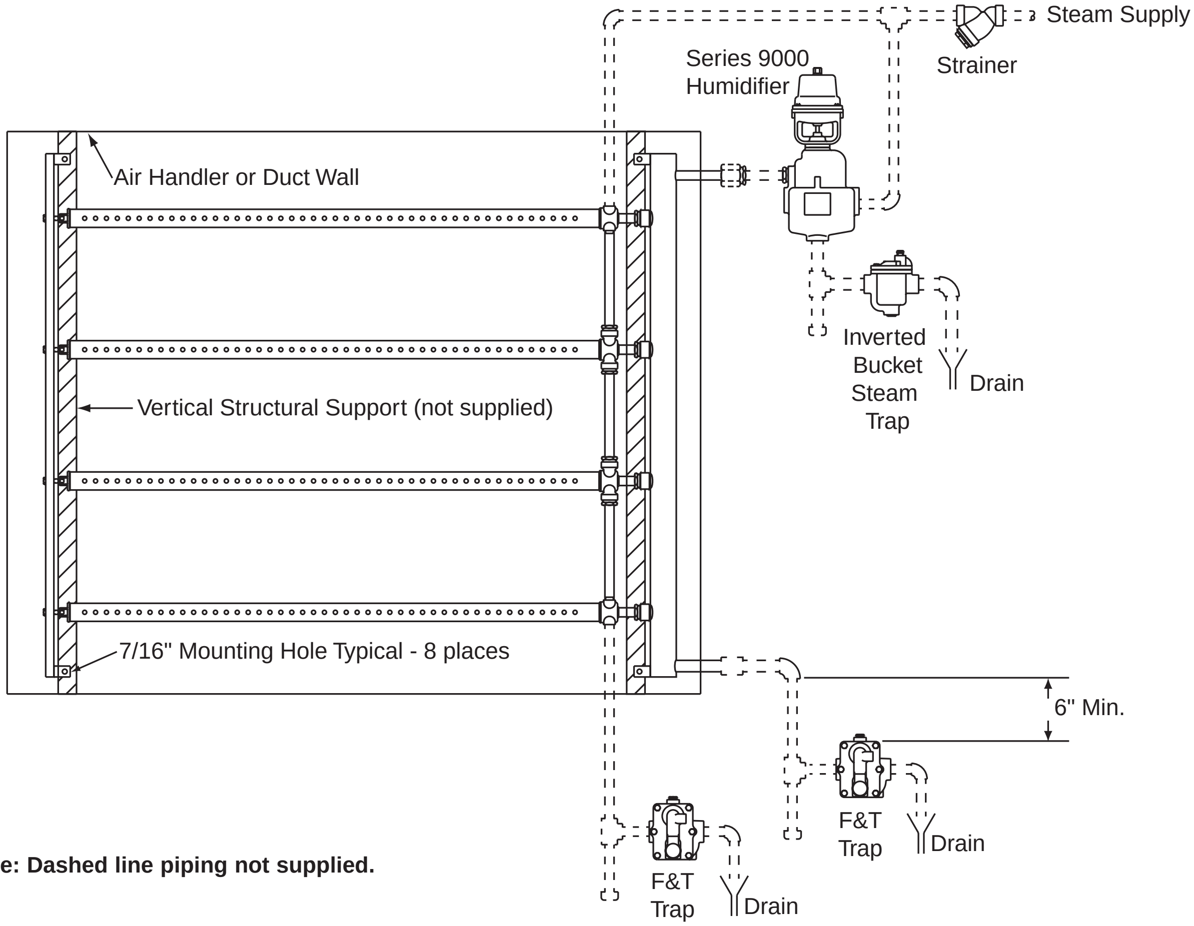

Note: Dashed line piping not supplied.

All dimensions and weights are approximate. Use certified print for exact dimensions. Design and materials are subject to change without notice.

HumidiPack, HumidiPackPlus and HumidiPack CF Steam Humidifier Systems

Importance of Non-wetting Distance

Non-wetting distance is an important consideration in the proper application of steam humidification equipment. Shorter distances simplify the job of the design engineer by allowing proper placement of temperature and humidity controllers and other components without fear of inaccurate readings or moisture damaged equipment. Air handling unit manufacturers concerned about the “footprint” of their units and end users with limited space in mechanical rooms also benefit.

HumidiPack

The Armstrong HumidiPack is a pre-fabricated steam humidifier system that is ready for insertion into the duct. The HumidiPack consists of a separator/header and multiple tube dispersion assembly when supplied for use with Armstrong steam generators. A steam supply control valve, strainer, steam trap, and a header drain trap are added when HumidiPack is used on pressurized steam. The HumidiPack accepts steam, separates entrained moisture from it, and admits it into a duct or air handler air stream via the dispersion assembly in a manner which substantially reduces non-wetting distance when compared to traditional humidifiers.

HumidiPackPlus

HumidiPackPlus combines the non-wetting distance shortening performance of HumidiPack with the additional feature of steam jacketed “active” tubes. The result is a dry, uniform discharge of steam for nearly any application with a steam source from a pressurized central supply.

HumidiPack® CF

HumidiPack CF offers the performance of HumidiPackPlus without the need of jacketing steam on pressurized steam applications. Typically used with a vertical header configuration, HumidiPack CF offers excellent separation of entrained moisture from steam with preheated active tubes. The entire face area is cold during periods of no demand, adding no energy to the air stream.

Simplified Installation

The HumidiPack and HumidiPackPlus dispersion assemblies slide neatly into ductwork or air handling units. This frequently reduces the time and labor required for field installations. Units with horizontal tubes and vertical headers offer all piping on one side of the ductwork or air handler to simplify piping.

Figure 150-2. HumidiPackPlus

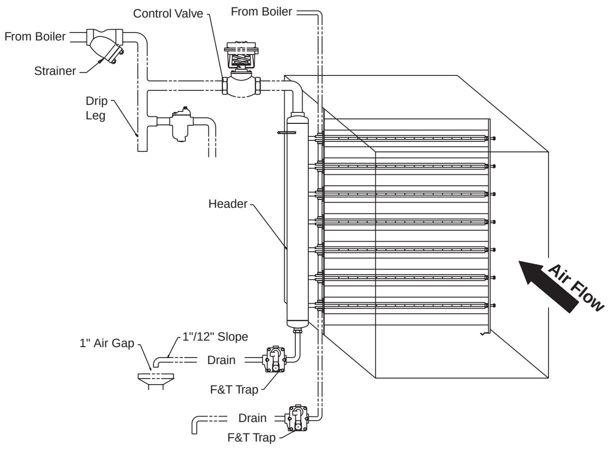

Stainless Steel Construction

HumidiPack and HumidiPackPlus rugged designs offer stainless steel construction of wetted parts including the header/separator and dispersion assembly for a long trouble-free operating life. Tube to header joints consist of welded stainless steel rather than assembled plastic adapters with o-rings, minimizing service requirements.

Compatible With Many Steam Sources

HumidiPack may be used with Armstrong Series CS-10 Steam-to-Steam humidifiers, gas and electric steam generating humidifiers, and with some systems including packaged boilers or central steam supply to 60 psig (4 bar). HumidiPackPlus may be used with packaged boilers or central steam supply to 60 psig (4 bar).

Application Flexibility

Many sizes and configurations of HumidiPack and HumidiPackPlus are available to meet new installation or retrofit needs.

Reduced Heat Gain to Duct Air from HumidiPack

Since no steam is admitted to the manifold assembly unless there is a demand for steam output, there is no heat gain to duct air when HumidiPack is not in use.

Figure 150-1. HumidiPack

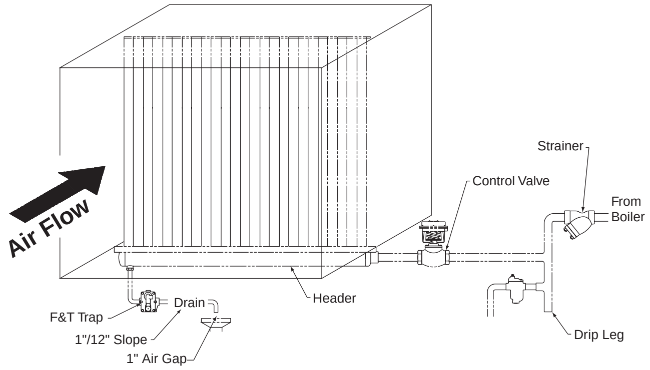

Figure 150-3. Horizontal HumidiPack CF

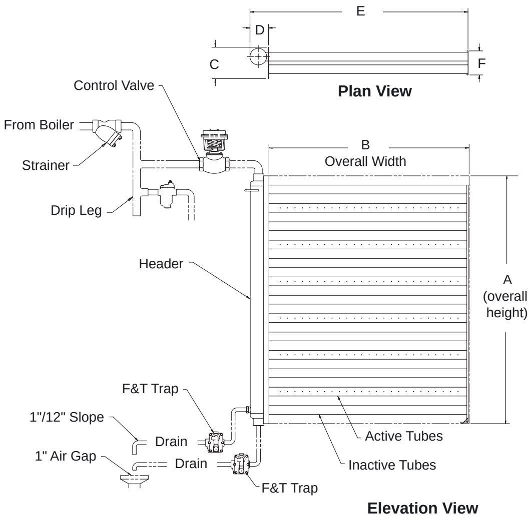

All dimensions and weights are approximate. Use certified print for exact dimensions. Design and materials are subject to change without notice.

Dispersion Tubes for Atmospheric Steam Generators

Duct Type Distribution

Where an existing duct system is available, steam is commonly discharged into the duct through a dispersion tube. Selection of the dispersion tube should meet the duct requirements in Table 151-1. If the steam dispersion tube is to be located below the humidifier, install a drip leg with water seal. (See Figure 152-2, Page 152).

Note: For all atmospheric units: Please contact factory for duct applications offering high static pressure (>4" W.C.) or velocities over 2,000 FPM. Avoid placing dispersion tubes in downward, high-velocity airflow. Please contact your local Armstrong representative with questions.

Note: When applicable, atmospheric humidifiers should be located as close to the air handling system as possible and never more than 40 feet of equivalent pipe away.

Figure 151-1. Dispersion Tube

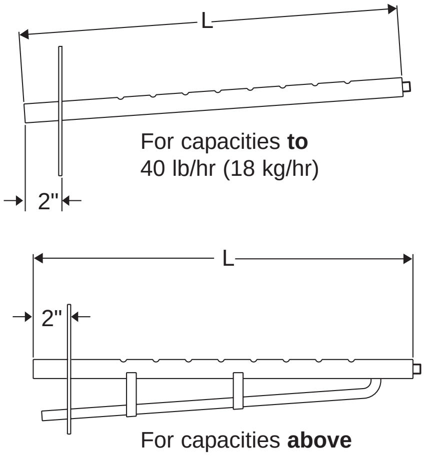

For capacities **to**
40 lb/hr (18 kg/hr)

For capacities **above**
40 lb/hr (18 kg/hr)

Table 151-1. Selecting Proper Steam Distribution Tube

Steam Dispersion Tube Model No.		Steam Dispersion Tube Length		Duct Width				Weight	
				Min		Max.			
"D" Type	"DL" Type	in	mm	in	mm	in	mm	lb	kg
D-1	DL-1	12	304	11	279	16	406	3	1.4
D-1.5	DL-1.5	18	457	17	432	22	559	3	1.4
D-2	DL-2	24	609	23	584	34	864	4	2
D-3	DL-3	36	914	35	889	46	1168	6	3
D-4	DL-4	48	1219	47	1194	58	1473	8	3.6
D-5	DL-5	60	1524	59	1499	70	1778	9	4
D-6	DL-6	72	1829	71	1803	82	2083	10	4.5
D-7	DL-7	84	2133	83	2108	94	2388	11	5
D-8	DL-8	96	2438	95	2413	106	2693	12	5.5
D-9	DL-9	108	2743	107	2718	118	2998	13	6
D-10	DL-10	120	3048	119	3023	130	3302	14	6.4

"D" type dispersion tubes are used with Series EHU-600, Series EHU-700 and Model CS-11 Steam-to-Steam.
"DL" type dispersion tubes are used with Series HC-4000 HumidiClean, Series GFH Gas Fired HumidiClean and Models CS-12, CS-13, CS-14 and CS-15 Steam-to-Steam.

Figure 151-2. HC-6100 or 6300 Duct Type Distribution

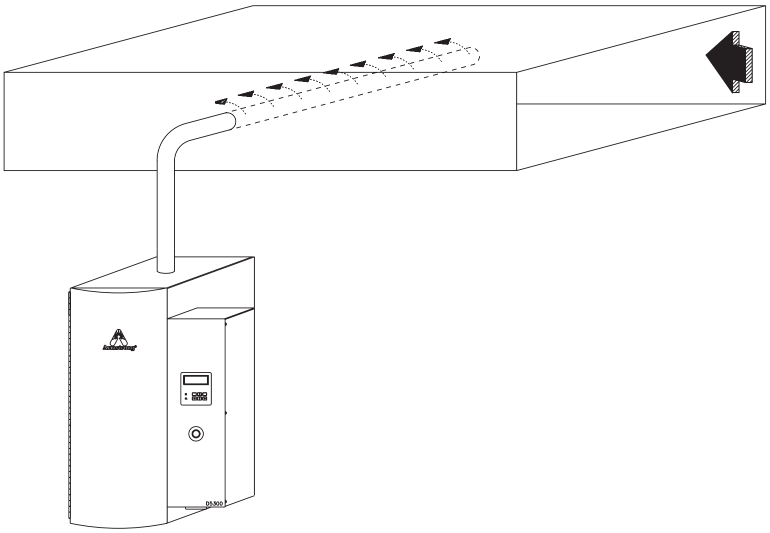

All dimensions and weights are approximate. Use certified print for exact dimensions. Design and materials are subject to change without notice.

Figure 152-1. HC-6100 or HC-6300 with Duct Located Below HumidiClean

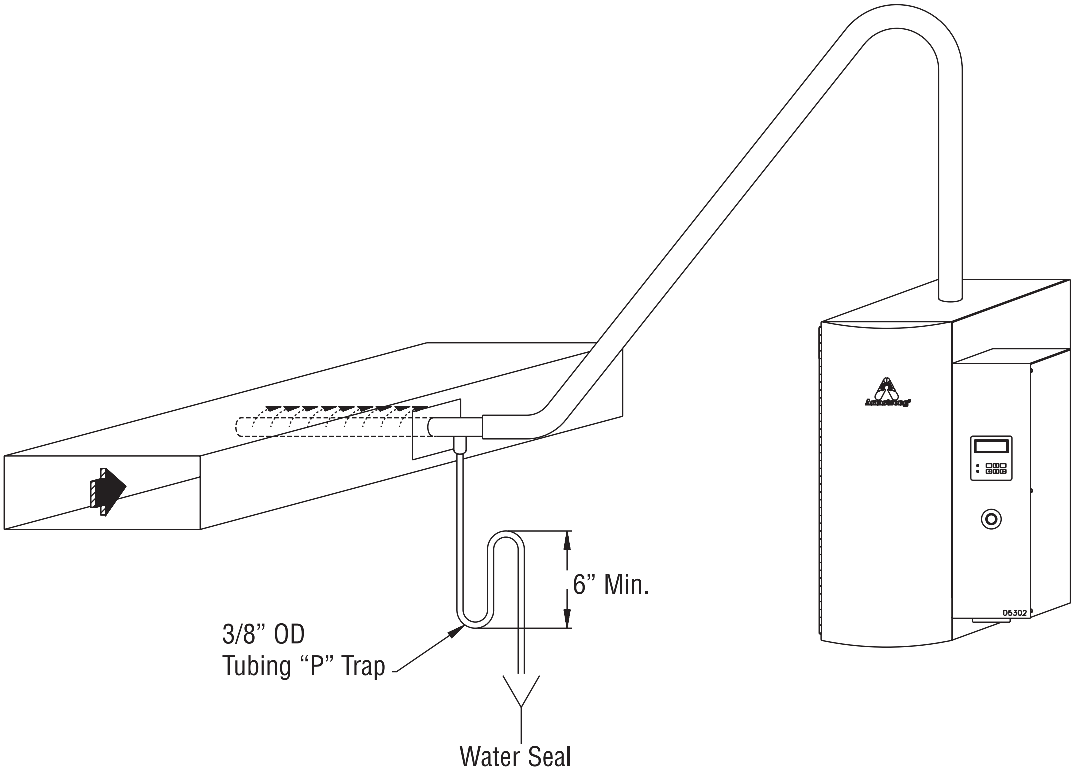

Figure 152-2. HC-6100 or HC-6300 with EHF-3 Fan Package Mounted on Wall

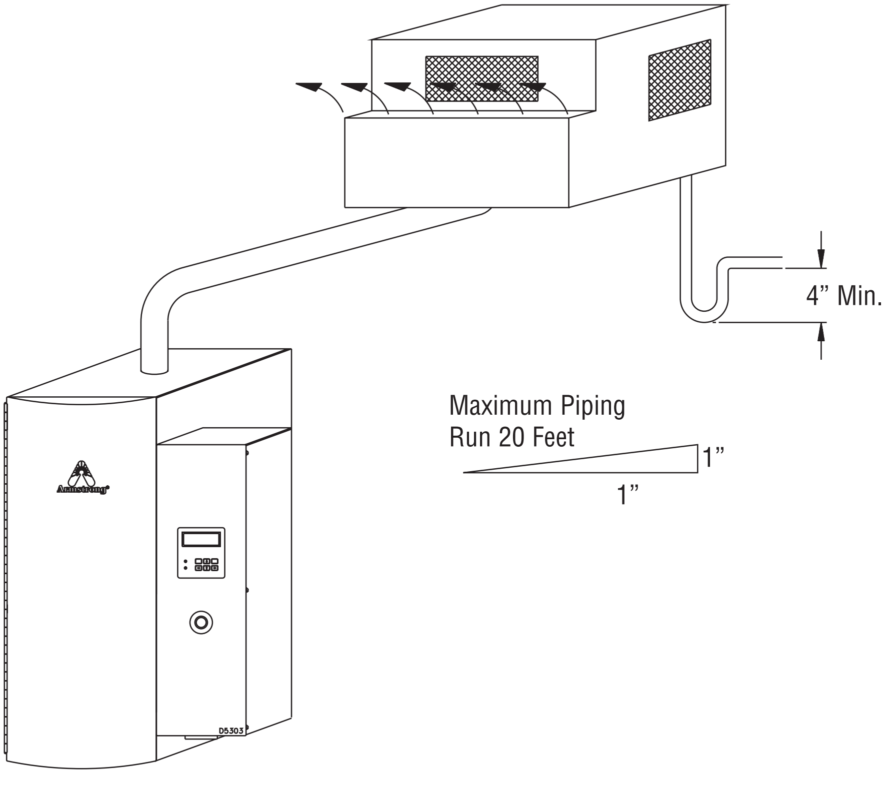

All dimensions and weights are approximate. Use certified print for exact dimensions. Design and materials are subject to change without notice.

Figure 153-1. HC-6100 or HC-6300 HumidiClean Piped to HumidiPack

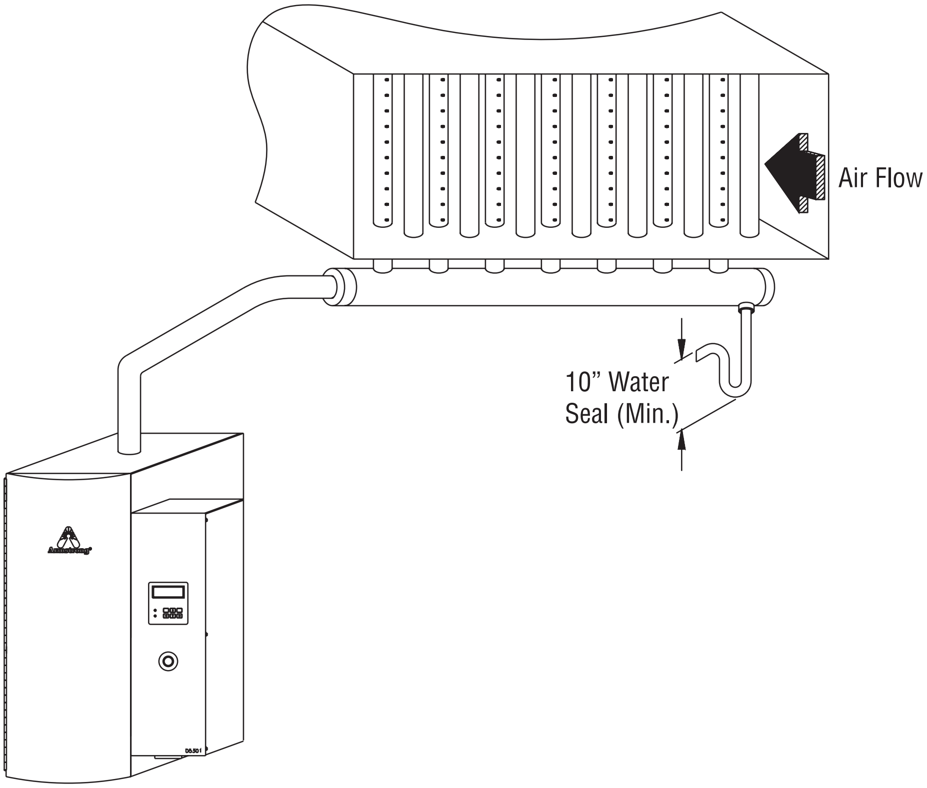

Figure 153-2. HC-6100 or HC-6300 General Installation Concept

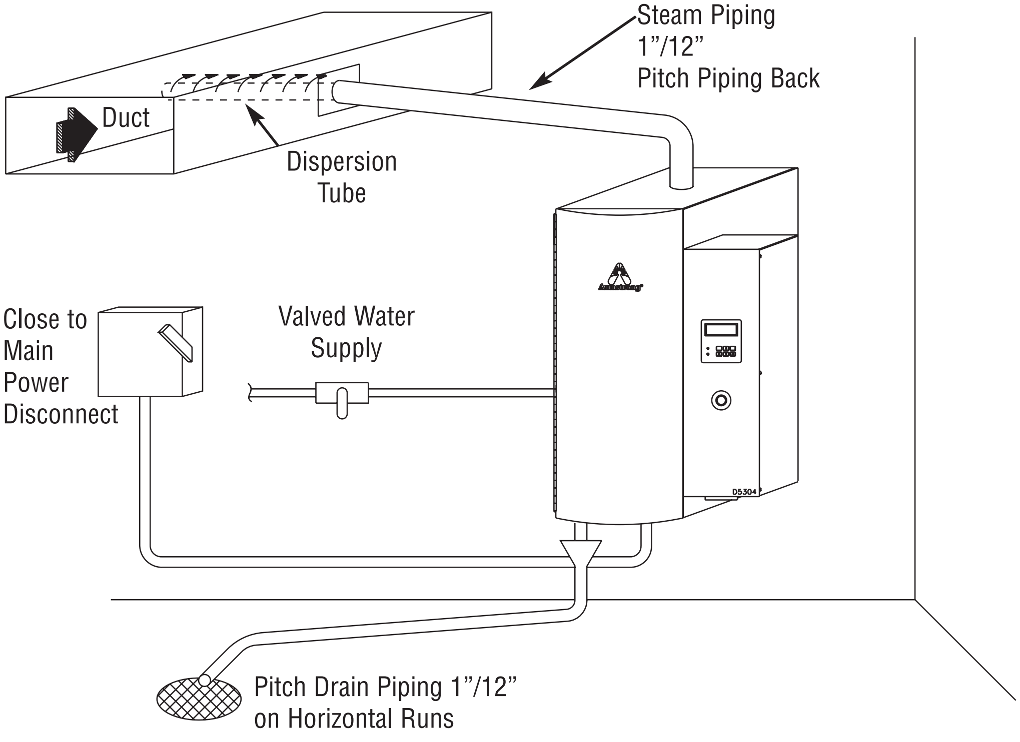

All dimensions and weights are approximate. Use certified print for exact dimensions. Design and materials are subject to change without notice.

Armstrong® SJDT Steam Jacketed Dispersion Tube

The Armstrong SJDT (Steam Jacketed Dispersion Tube) is an all stainless steel dispersion tube with the unique ability to accept jacketing steam from atmospheric steam generating humidifiers. The SJDT utilizes a portion of the steam to "jacket" the entire length of the tube, keeping the dispersion tube hot, even during periods of low demand. This "jacketing" effect improves the quality of steam discharge and reduces the chance for spitting or dripping in your air handling system.
In addition, the SJDT offers the following benefits:

- Only steam jacketed dispersion tube currently available to accept steam from atmospheric steam generating humidifiers.
- Designed for use on Armstrong electronic self-contained EHU's, Electric and Gas Fired HumidiClean and Steam-to-Steam humidifiers.
- Internal drain port allows any condensate formed to be drained from the dispersion tube as well as the jacketed passageway.
- Steam jacket eliminates the need to use nozzles that extend inside the pipe.
- No air binding.
- Accepts and disperses steam up to 120 pph.
- All stainless steel construction.
- Simple installation.
- Sizes available are 1 foot up to 10 feet in length.
- Patent 5,942,163.

Table 154-1. SJDT List of Materials

Dispersion Tube	T304 Stainless Steel
Drain Tube	
Cover Plate	
Jacket Tube 2" Pipe	T304 Stainless Steel Sch. 5

Table 154-2. SJDT Physical Data

SJDT Model Number	"L" Length		Duct Width			
			Min.		Max.	
	in	mm	in	mm	in	mm
SJDT-1	12	305	11	279	16	406
SJDT-1.5	18	457	17	432	22	559
SJDT-2	24	609	23	584	34	864
SJDT-3	36	914	35	889	46	1168
SJDT-4	48	1219	47	1194	58	1473
SJDT-5	60	1524	59	1499	70	1778
SJDT-6	72	1829	71	1803	82	2083
SJDT-7	84	2134	83	2108	94	2388
SJDT-8	96	2438	95	2413	106	2692
SJDT-9	108	2743	107	2718	118	2997
SJDT-10	120	3048	119	3023	130	3302

Figure 154-1. Steam Jacketed Dispersion Tube

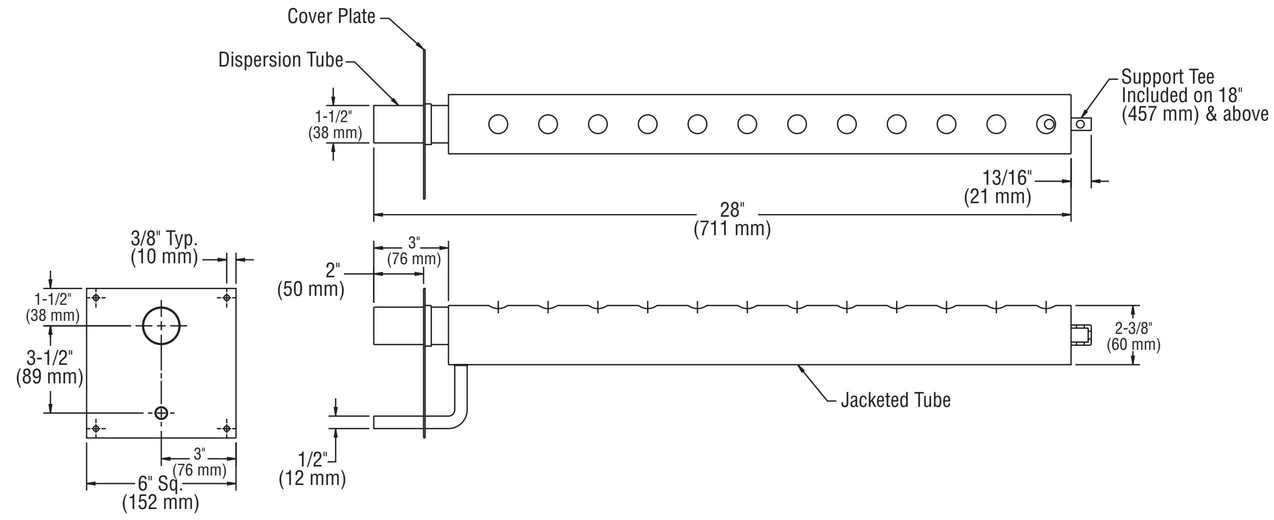

All dimensions and weights are approximate. Use certified print for exact dimensions. Design and materials are subject to change without notice.

Suggested Specification for SJDT

Steam injection into air handling system for humidification purposes shall be by means of an all stainless steel steam jacketed dispersion tube suitable for accepting steam from an atmospheric (<1 psi) source such as electronic or steam-to-steam, humidifiers without dripping or spitting. Substitution of nozzles alone in place of steam jacketing shall not be acceptable.

A portion of the steam supply shall be diverted from the dispersion tube to jacket the entire length of the tube through a two pass (supply and return) jacketing passageway.

Dispersion tube shall incorporate an internal drain port to drain any condensate present in the jacket. Return jacketed passageway shall include a 1/2" drain connection for field piping to a "P" trap of not less than 6". Field piping connections shall be limited to the humidifying steam supply and single condensate gasses shall be evacuated from the jacket through escape passages near the dispersion tube steam discharge holes. Dispersion tube shall be Armstrong SJDT.

All dimensions and weights are approximate. Use certified print for exact dimensions. Design and materials are subject to change without notice.

EHF Fan Package for Area Type Distribution

Armstrong EHF fan package provides humidity distribution when an air handling duct system is not available. The attractive EHF units are designed to be used with Armstrong atmospheric steam units to include:

Versatility – The EHF-2 unit may be installed directly on top of the EHU-701 humidifier while the EHF-3 unit will mount directly onto the EHU-703. The fan packages also may be hung on a wall – permitting the introduction of humidity with any atmospheric humidifier mounted in another area.

Steel Construction – Cabinet is constructed of 18-gauge steel and finished with tough epoxy enamel. Color matched to companion EHU family.

Long Fan Life – “Air-Over” design cools the blower motor for long operating life.

Capacity and Electrical Information

The maximum humidity dispersion capacity of each EHF-2 area fan package is 30 lb/hr (13.6 kg/hr).
The maximum humidity dispersion capacity of each EHF-3 area fan package is 120 lb/hr (54.4 kg/hr).

Note: The EHF fan packages require a separate 120 volt power supply.

Installation Information

For detailed installation information, please refer to Armstrong Installation Bulletin IB-96 for EHF-2, or IB-95 for EHF-3.

Table 156-1. EHF List of Materials and Weights

Area Fan Unit Model EHF-2 and 3	
Cabinet	Steel - 18 ga. with Epoxy Enamel Coating
Blower Fan EHF-2	120 VAC, 60 Hz., 1.3 amp 280 CFM @ 1,380 RPM
Blower Fan EHF-3	120 VAC, 50/60 Hz., 2.9 amp 465 CFM @ 1,530 RPM*

Weights

Model No.	Approximate Shipping Weight		Maximum Operating Weight	
EHF-2 Package	33 lb	15 kg	32 lb	15 kg
EHF-3 Package	34 lb	15 kg	33 lb	15 kg

*208, 240, 480 and 600 VAC available

Table 157-1. Dimensions

Item	Description	EHF-2		EHF-3	
		in	mm	in	mm
A	Width	18	457	19-1/2	495
B	Height	13	330	16	406
C	Depth	11-1/2	292	14	356
D	C Mounting Holes	16	406	16	406
E	Height C Electrical Knockout	5-1/4	133	14-1/2	367
F	Depth ℄ Electrical Knockout	1-1/2	40	3	76
G	Depth ℄ Hose Connection	5-1/2	140	7	178
H	Width ℄ Hose Connection	6-1/2	165	7	178
I	Bottom of Cabinet	4-1/8	104	—	—
J	Width Top of Cabinet to Mounting Holes	1-1/8	28	2	51
K	Side ℄ Mounting Holes	1	25	1-3/4	44

Figure 157-1. EHF-2

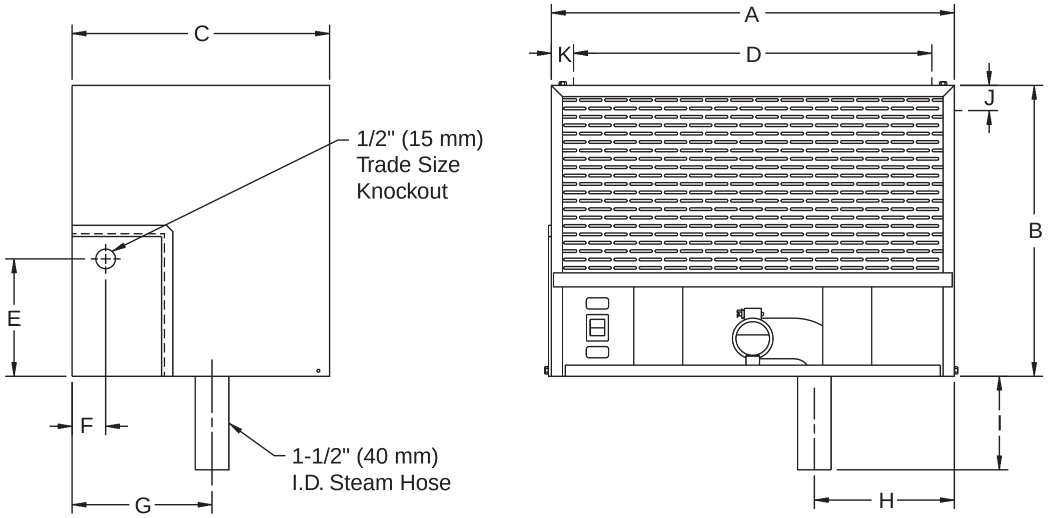

Figure 157-2. EHF-3

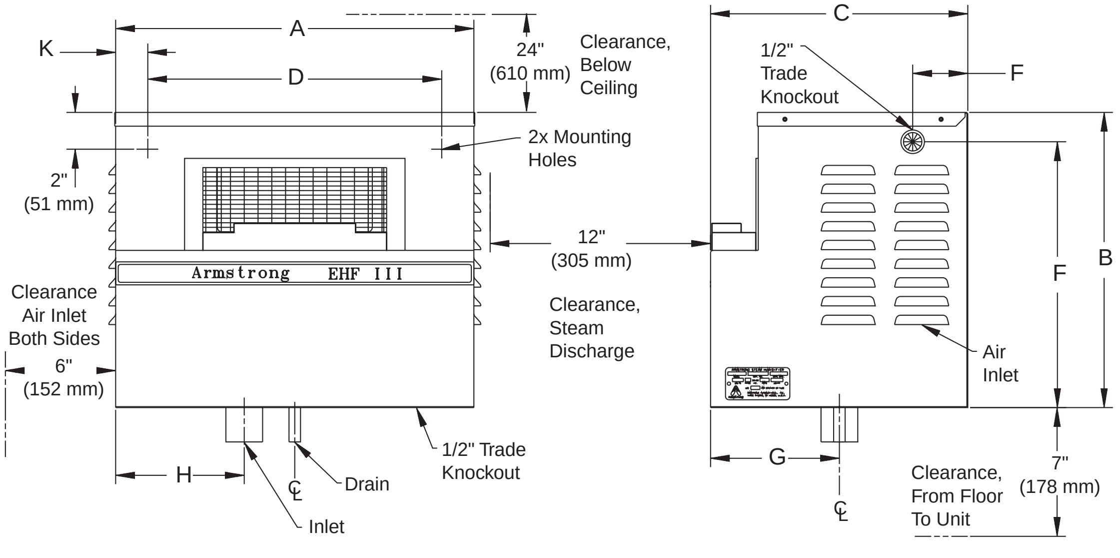

Temp-R-Drain for Condensate Cooling

Figure 158-1.

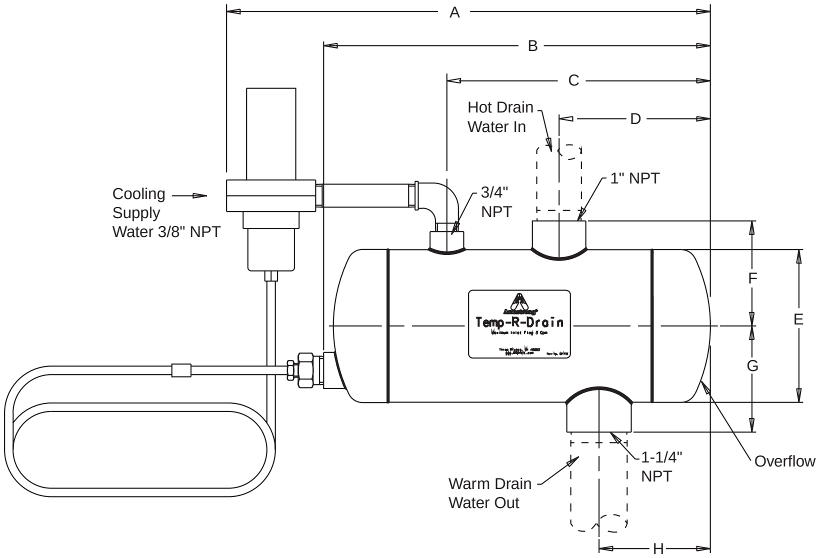

The Temp-R-Drain is a device that mixes hot condensate and cold supply water to maintain a drain outlet temperature suitable for drainage directly to any plumbing system. The Temp-R-Drain's body and fittings are constructed 304 stainless steel coupled with a brass-bodied thermostatically controlled tempering valve. When hot condensate is drained into the Temp-R-Drain's body, the tempering valve opens, allowing cold water to enter the chamber and mix with the hot condensate cooling the water to be drained.

Features

- Fast acting mixing valve to monitor and control outlet drain temperature.
- Standard pipe sizes and integral air gap, which allows unit to be hard piped into plumbing system.
- Rugged construction: Body and fittings of 304 stainless steel, brass-bodied tempering valve.
- Maximum capacity: Temp-R-Drain will temper 3 gpm of 212°F water to 140°F when supplied with 70°F or cooler water at 20 psi or more.

Suggested Specification for Temp-R-Drain

Drain tempering device:

A. Body and fittings shall be constructed of 304 stainless steel with welded seams.
B. Cold water supply valve shall be brass, controlled by thermostatic element.
C. Drain temperature shall be factory preset to 140°F and shall be field adjustable.
D. Unit shall have integral air gap to allow for hard piping into plumbing system.
E. Unit shall be installed horizontally and shall drain completely without using separate drain valve.

Table 158-1. Temp-R-Drain List of Materials

Mixing Chamber & Fittings	304 Stainless Steel
Tempering Control Valve	Brass Bodied

Table 158-2. Temp-R-Drain Dimensions

Item	Description	in	mm
A	Overall Length	13-1/2	343
B	Vessel Length	11-3/8	290
C	End Cap to CW Inlet	7-7/8	197
D	End Cap to HW Inlet	4-1/2	113
E	Vessel Diameter	4-1/2	114
F	Vessel ℄ to Inlet	3-1/8	79
G	Vessel ℄ to Outlet	3-1/8	80
H	End Cap to Outlet	3-3/8	83

Figure 158-2. Typical Installation

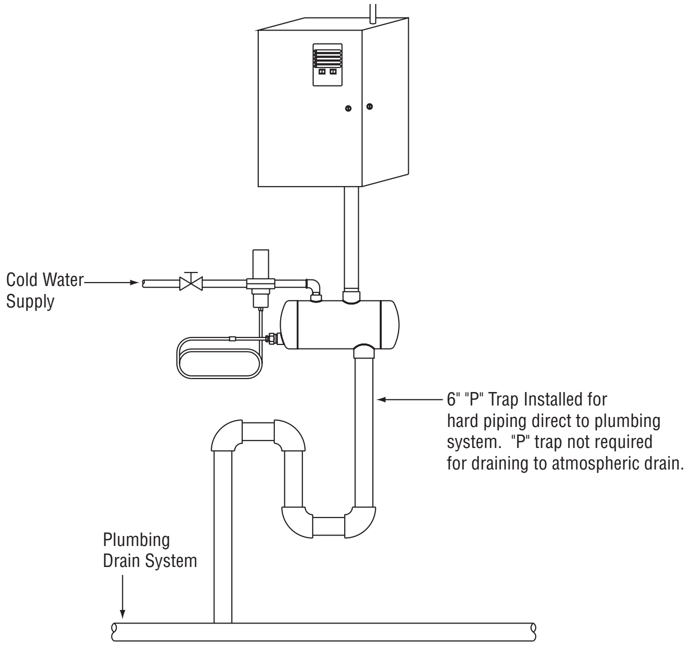

COMPRESSED AIR

Armstrong

Armstrong Cool-Fog Systems

Armstrong International, Inc. is a leading supplier of hydro-pneumatic fogging systems used for both humidification and evaporative cooling. Its systems were first developed in response to industry needs for humidification systems that would be:

- Energy efficient
- Low maintenance
- Reliable
- Precisely controlled
- Clean

Cool Fog Systems, Inc. installed its first hydro-pneumatic humidification system in 1977. Since then, Armstrong-Cool Fog Systems has established itself with professional engineers and industry as a viable and desirable technology. Armstrong-Cool Fog has humidified over 100 million square feet of space including corporate occupancies, museums, hospitals, institutional facilities, **and semiconductor fabrication, and electronics manufacturing.**

Armstrong currently manufactures and markets the following systems for environmental control applications:

- **Cool Fog Systems** (CF) for use with potable or reverse osmosis purified water. All wetted parts are either stainless steel, brass, or copper. For general commercial and industrial application.
- **Pure Fog Systems** (PF) for use with de-ionized water. All wetted parts are stainless steel. For clean rooms, laboratories, semiconductor fabs, and other ultra clean environments.
- **Standard Proportional Systems** (STD) for air handler or duct applications. Available as CF or PF. For reduced evaporation distance requirements with medium to high compressed air consumption rates and 50:1 control modulation.
- **Variable Differential Control Systems** (VDC) for air handler or duct application. Available as CF or PF. For reduced compressed air consumption rates and 100:1 control modulation.
- **HumidiComp** (HC), ON/OFF SYSTEMS for air handler or duct applications. Available as CF or PF. For reduced cost compared to STD and VDC. Systems. Only recommended for fixed outside air rates and stable humidification loads.
- **Direct Area Discharge** (DDF), ON/OFF SYSTEMS for direct area discharge. Available as CF or PF.

Available from Armstrong Cool-Fog

Armstrong-Cool Fog Systems offers a complete package of products and services:

- Fogger assemblies with manifolds
- Control systems - standard & custom
- Precise engineering design and application assistance
- Detailed energy analysis and design
- Submittal drawings
- Installation Instructions
- Operating and maintenance manuals
- Full warranty
- Commissioning services
- Maintenance contracts
- Packaged systems
  -Humidification
  -Controls
  -Compressed air supply
  -RO water supply
- Water analysis

What is Fogging?

Armstrong-Cool Fog Systems are humidification systems that atomize water particles to produce a fog. When the fog is sprayed into a warm, dry air stream or space, the water readily evaporates without the addition of heat. The process is also referred to as evaporative humidification and follows the wet bulb line (i.e. constant enthalpy) on the psychrometric chart.

Armstrong-Cool Fog Systems may also be used for the purpose of air-cooling. Because no heat is added to evaporate the water, there is a cooling effect that is directly proportional to the amount of water evaporated. This is also referred to as adiabatic or constant enthalpy cooling and humidification.

How Foggers Operate

Armstrong-Cool Fog Systems use both compressed air and pressurized water to achieve atomization.

Pressurized water is injected into the discharge orifice of a compressed air stream. As the compressed air is discharged through an orifice, the air's potential energy is converted to kinetic energy, which is imparted to the injected water. In the process, the water is sheared into atomized water particles. In other words, the rapidly expanding air stream breaks up the water particles.

The mixture of atomized water and expanding air is discharged through an orifice and deflected off a resonator tip which further reduces the water particle size and spreads the atomized water and air mixture. The final product is fog.

Figure 161-2. Fogger Head

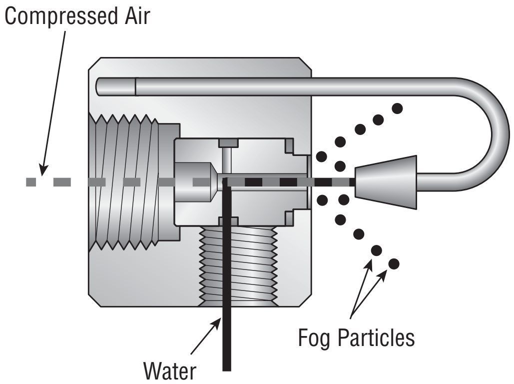

Figure 161-1.

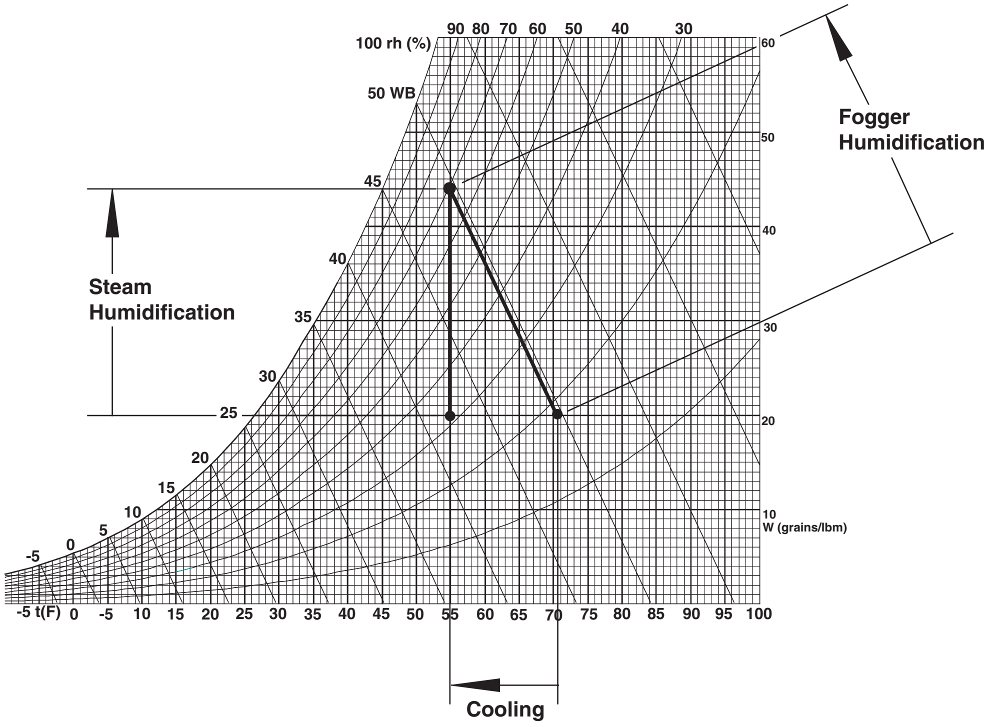

Note: Psychrometric chart representations do not include fan heat gains, duct losses, infiltration losses or cooling coil dehumidification.

Humidification Reduces Heating Costs

All forms of humidification provide a variety of benefits, not the least of which is a reduction in heating load for human comfort. Studies indicate people are generally most comfortable when relative humidity is maintained between 35% and 55%. When air is dry, moisture evaporates more readily from the skin, producing a feeling of chilliness even with temperatures of 75°F or more. Because human perception of RH is often sensed as temperature differential, it's possible to achieve comfortable conditions with proper humidity control at lower temperatures. The savings in heating costs are typically very significant over the course of just a single heating season.

Efficient use of internal heat gain and waste heat can yield up to a 90% reduction of energy costs compared to steam humidification.

Large commercial offices and manufacturing facilities can have an extended cooling season or year round cooling load. In such situations, a mixed air economizer system can be employed to exhaust warmer return air and replace it with cooler outside air.

Although free cooling is achieved, the dryer outside air actually increases the humidification load and humidification energy consumption.

Instead of exhausting the warmer return air, foggers use the warm return air to evaporate water. Humidification is achieved without the energy required to boil water and economizer cooling is still achieved without mechanical refrigeration.

50-60% reduction of economizer humidification load and associated energy costs.

Because of the cooling experienced with fogging systems, economizer systems can run at higher mixed air temperatures which means less outside air is required. Therefore, the humidification load is greatly reduced compared to the conventional steam humidification load.

Efficient use of warm, dry outside air reduces cooling costs.

Some outdoor climates require both cooling and humidification to achieve the desired indoor design conditions. Obviously, economizers cannot deliver free cooling when the outside air is warmer than the desired zone temperature.

However, if the humidity levels are low, such as in the Western High Plains of the United States, significant free cooling may be achieved with an evaporative humidification system. This is true for both mixed air and 100% make-up air systems.

If fact, many non-desert climates experience significant cooling and humidification hours each year.

Ultra clean humidification source.

Armstrong-Cool Fog's Pure Fog (PF) systems are currently installed in many of the world's highest technology electronics and semiconductor manufacturing facilities. De-ionized water is used for an ultra-pure source of humidification to maintain a non-contaminated environment.

Highest Kinetic Energy.

Armstrong-Cool Fog Systems use the highest air pressures of all high capacity atomizer systems. The result is the highest kinetic energy imparted to the water particles. Because Armstrong-Cool Fog Systems produce the highest energy particle, we have the highest evaporation efficiency. In other words, we evaporate more water per unit volume of water sprayed. This translates directly into the highest energy savings. This also results in less waste of purified water which, if not evaporated, goes down the drain.

Highest kinetic energy also means the driest running system.

Because Armstrong-Cool Fog Systems produce the highest energy particle, we have the shortest evaporation distances **and have the driest running system** of all high capacity atomizer systems.

Energy savings with clean rooms.

Clean room humidification typically requires ultra-pure (i.e. deionized or reverse osmosis filtered) water as a humidification source. As ultra-pure water is considered corrosive at elevated temperatures, all stainless steel components would be required for steam service.

In many applications, a stainless steel re-boiler would be used to accomplish clean room humidification with ultra-pure water. Due to the inefficiencies of the heat exchange process, a Cool Fog system could be more energy efficient . . . even if 100% outside air is used.

Reduced maintenance cost with no boiler or steam distribution system.

Steam injection humidification, while similar to Cool Fog Systems in reliability and accuracy, can require more maintenance in the following areas:

- blowdown
- leaks
- traps
- scale
- carbonic acid
- chemical treatment

Reduced maintenance and improved reliability over other evaporative systems.

Traditional evaporative systems and other atomizing systems have many maintenance requirements that are not a concern with Armstrong-Cool Fog Systems.

- Swamp coolers require replacement of pads, cleaning & chemicals.
- Air washers require cleaning & chemicals.
- Low pressure air/water atomizers have moving parts in their nozzles that break.
- High pressure water atomizers (no compressed air) are prone to clogging of the orifice.
- Cool Fog manifolds come completely assembled, so less installation time is required.

Instant and Precise Control Response.

- 50:1 turndown with standard proportional control
- 100:1 turndown with variable differential control
- no staging
- fast pneumatic response
- patented feedback system

Quick and Easy Installation.

- simple design
- pre-assembled manifolds

Highest Mechanical Integrity.

As with everything Armstrong makes, quality is not compromised in order to produce a low priced system. Armstrong-Cool Fog Systems are made with both the sturdiest materials and design.

Potential Energy Savings Opportunities with Armstrong-Cool Fog Systems

Due to the dry bulb cooling effect of evaporative humidification systems, substantial energy saving opportunities present themselves when compared to the cost of using steam for humidification. These opportunities are easily quantified using bin weather data. The estimated energy saving may be used to estimate the payback period for an investment in an Armstrong-Cool Fog System.

Mixed Air System with Dry Bulb Economizer

During the fall, winter, and spring economizer seasons, typical commercial air conditioning systems supply air to conditioned spaces at 55°F. If the minimum outside air percentage is low enough, return air and outside air can be mixed to 55°F, or higher, during most, or all, of the season without pre-heating.

The typical maximum humidification load conditions occur when the outside air is 55°F. At such conditions,100% outside air is used for the free cooling effect.

When the outside air temperature is between the supply air temperature and the building design temperature, 100% outside air is cooled to the supply air temperature.

When the outside air temperature is above the building design temperature, outside air is reduced to the minimum percentage to minimize the cooling load.

Energy savings potential may be realized in three ways with mixed air systems using a dry bulb economizer:

1. Latent Heat Recovery from Return Air.

Due to the typical internal heat gain of commercial offices and manufacturing facilities, outside air and return air can be mixed to the required temperature for evaporative humidification without pre-heating. However, if minimum outside air requirements are high enough, pre-heating of the mixed air could be required on the coldest days.

Therefore the energy savings **for each temperature bin** may be calculated as follows:

\+ Cost of Steam
\- Additional Cost of Preheat **(if any)**
\- Cost of Air Compressor with Armstrong-Cool Fog
= Latent Energy Savings

The psychrometric representation of the process looks like this: (see Figure 163-1.)

Figure 163-1. Latent Heat Recovery from Return Air

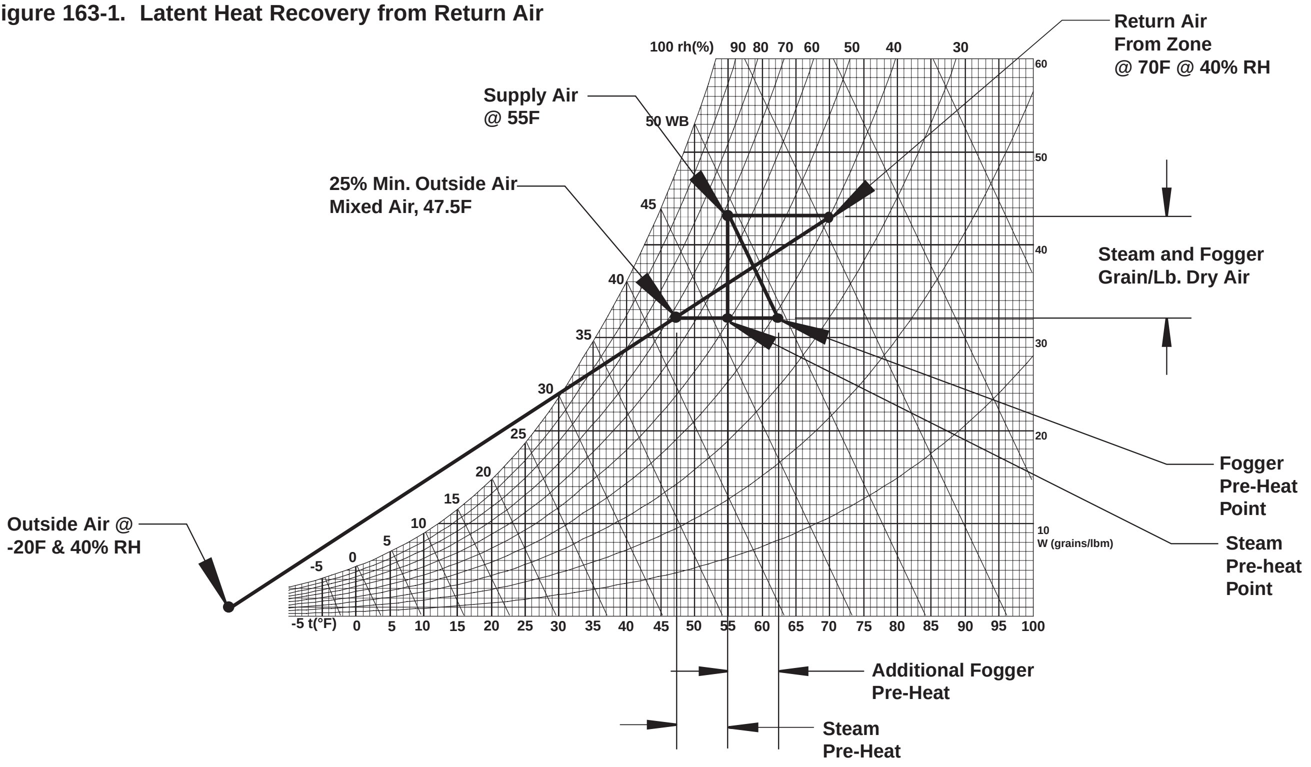

Note: Psychrometric chart representations do not include fan heat gains, duct losses, infiltration losses or cooling coil dehumidification.

2. Reduction in Humidification Load

Due to their dry bulb cooling effect, Armstrong-Cool Fog Systems require that outside and return air are mixed to the wet bulb temperature of the supply air. Whereas, steam humidification systems require that outside air and return air are mixed to the dry bulb temperature of the supply air.

The result is that less outside air is used with evaporative humidification, and therefore, the humidification load is also reduced.

Therefore the energy savings **for each temperature bin** may be calculated as follows:

Cost of Differential Increase in Humidification Load with Steam = Economizer Energy Savings

The psychrometric process of the reduced humidification load is as follows: (see Figure 164-1.)

Figure 164-1. Reduction in Humidification Load

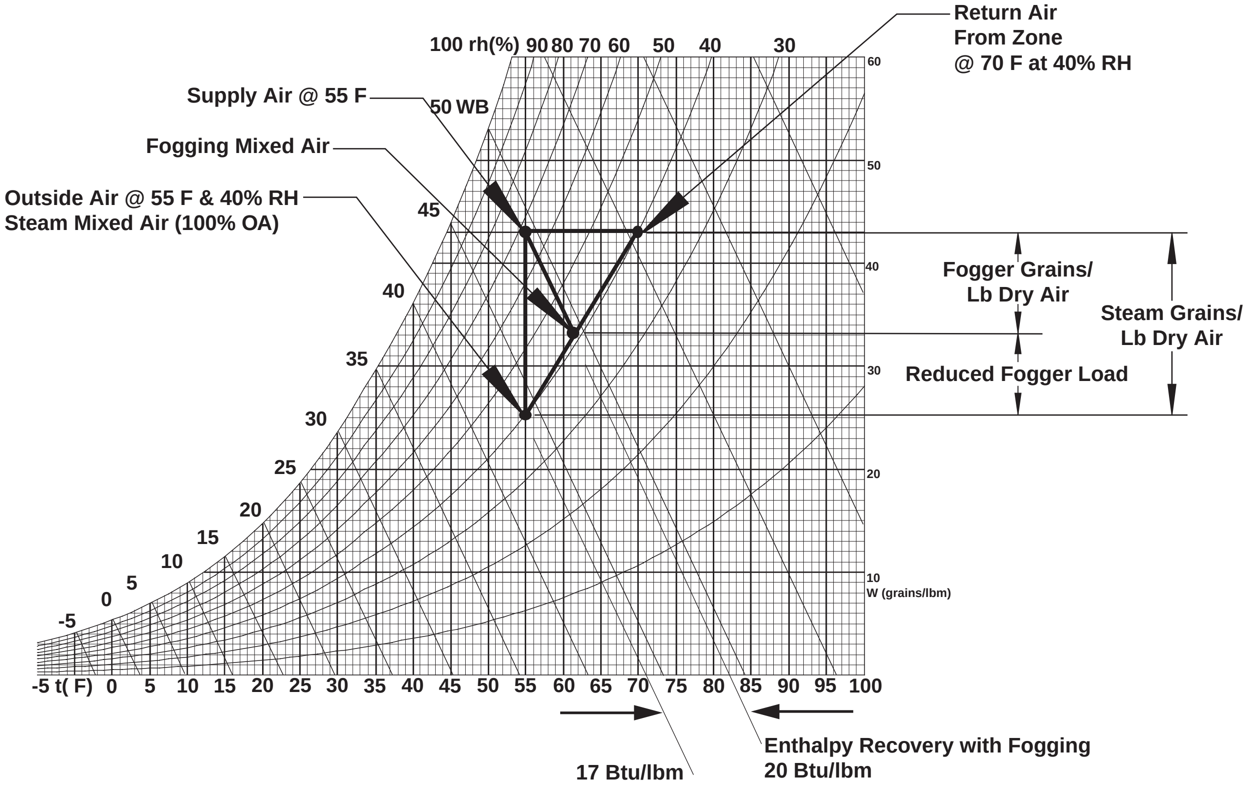

Note: Psychrometric chart representations do not include fan heat gains, duct losses, infiltration losses or cooling coil dehumidification.

3. Mixed Air Cooling Savings

Anytime the outside air temperature is both above the dry bulb temperature and below the dew point of the supply air, cooling savings may be realized.

Therefore the energy savings **for each temperature bin** may be calculated as follows:

+Cost of Differential Increase in Mechanical Cooling with Steam
-Cost of Air Compressor with Armstrong-Cool Fog
=Cooling Energy Savings

The psychrometric representation of mixed air cooling savings is as follows. (see Figure 165-1, 166-1 and 167-1.)

**Figure 165-1. Mixed Air Cooling Savings
Spring/Fall Economizer—Mixed Air**

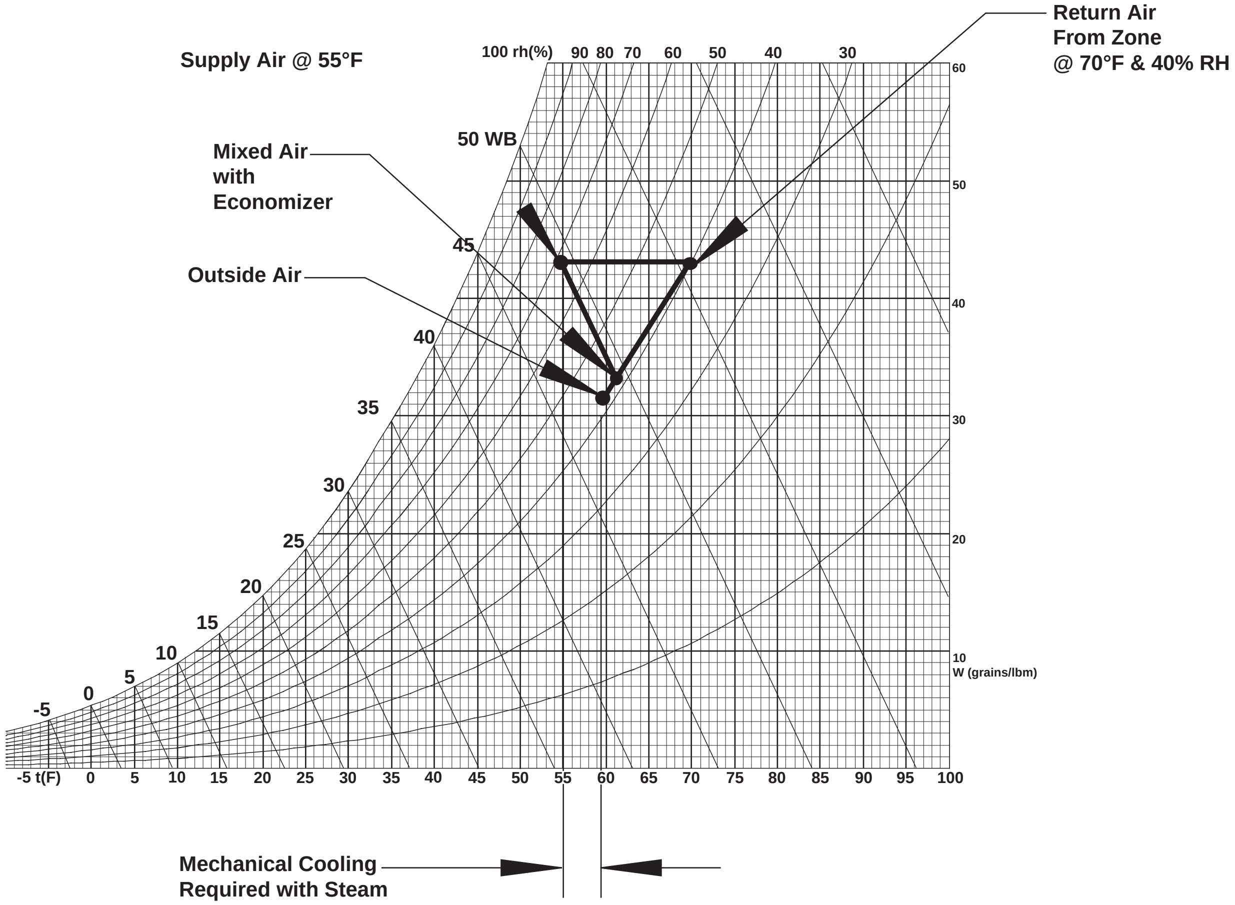

Note: Psychrometric chart representations do not include fan heat gains, duct losses, infiltration losses or cooling coil dehumidification.

3A. Mixed Air Cooling Savings

Anytime the outside air temperature is both above the dry bulb temperature, and below the dew point of the supply air, cooling savings may be realized.

Therefore the energy savings **for each temperature bin** may be calculated as follows:

+Cost of Differential Increase in Mechanical Cooling with Steam
-Cost of Air Compressor with Armstrong-Cool Fog
=Cooling Energy Savings

The psychrometric representation of mixed air cooling savings is as follows. (see Figure 165-1, 166-1 and 167-1.)

Figure 166-1. Mixed Air Cooling Savings Spring/Fall Economizer—100% Outside Air

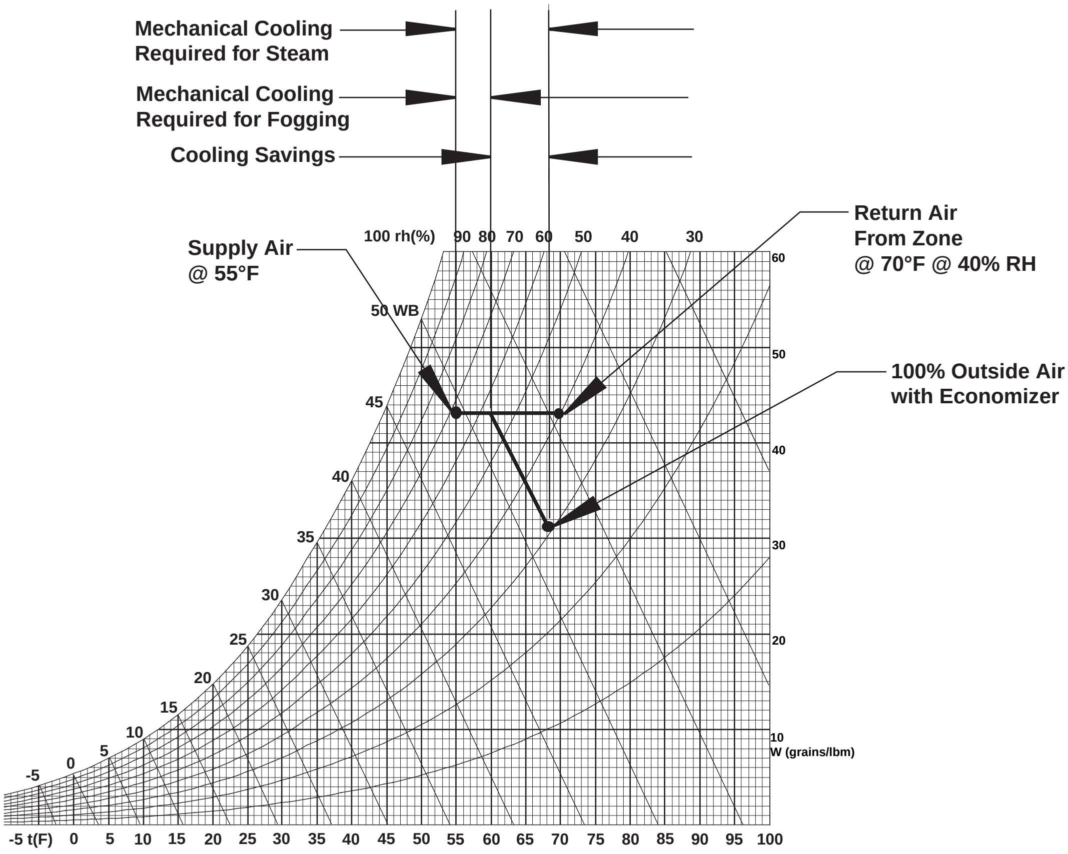

Note: Psychrometric chart representations do not include fan heat gains, duct losses, infiltration losses or cooling coil dehumidification.

3B. Mixed Air Cooling Savings

Anytime the outside air temperature is both above the dry bulb temperature, and below the dew point of the supply air, cooling savings may be realized.

Therefore the energy savings **for each temperature bin** may be calculated as follows:

+Cost of Differential Increase in Mechanical Cooling with Steam
-Cost of Air Compressor with Armstrong-Cool Fog
=Cooling Energy Savings

The psychrometric representation of mixed air cooling savings is as follows. (see Figure 165-1, 166-1 and 167-1.)

Figure 167-1. Mixed Air Cooling Savings
Summer Cooling
Minimum Outside Air

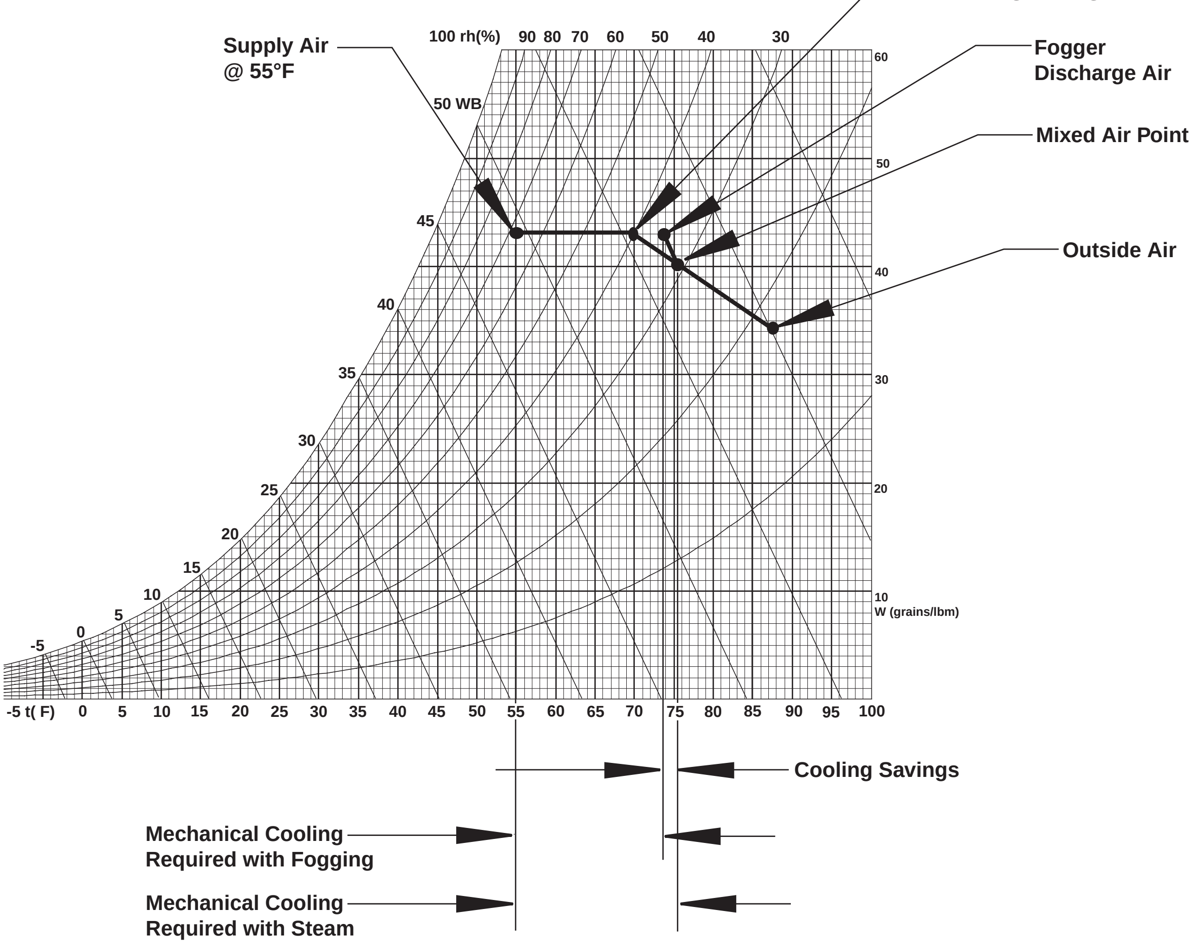

Note: Psychrometric chart representations do not include fan heat gains, duct losses, infiltration losses or cooling coil dehumidification.

4. 100% Make-up Air Cooling Savings

In hot and dry climates with light heating season and extensive cooling and humidification season, substantial energy savings can be realized with evaporative cooling systems, even when 100% outside air is required.

The potential energy savings **for each temperature bin** may be calculated as:

+ Cost of Differential Increase in Mechanical Cooling with Steam Humidification
\- Cost of Preheat **(if any)**
\- Cost of Air Compressor with Armstrong-Cool Fog
= Cooling Energy Savings

The psychrometric representation of the 100% outside air cooling savings is as follows: (see Figure 168-1)

Figure 168-1. 100% Make-up Air Cooling Savings

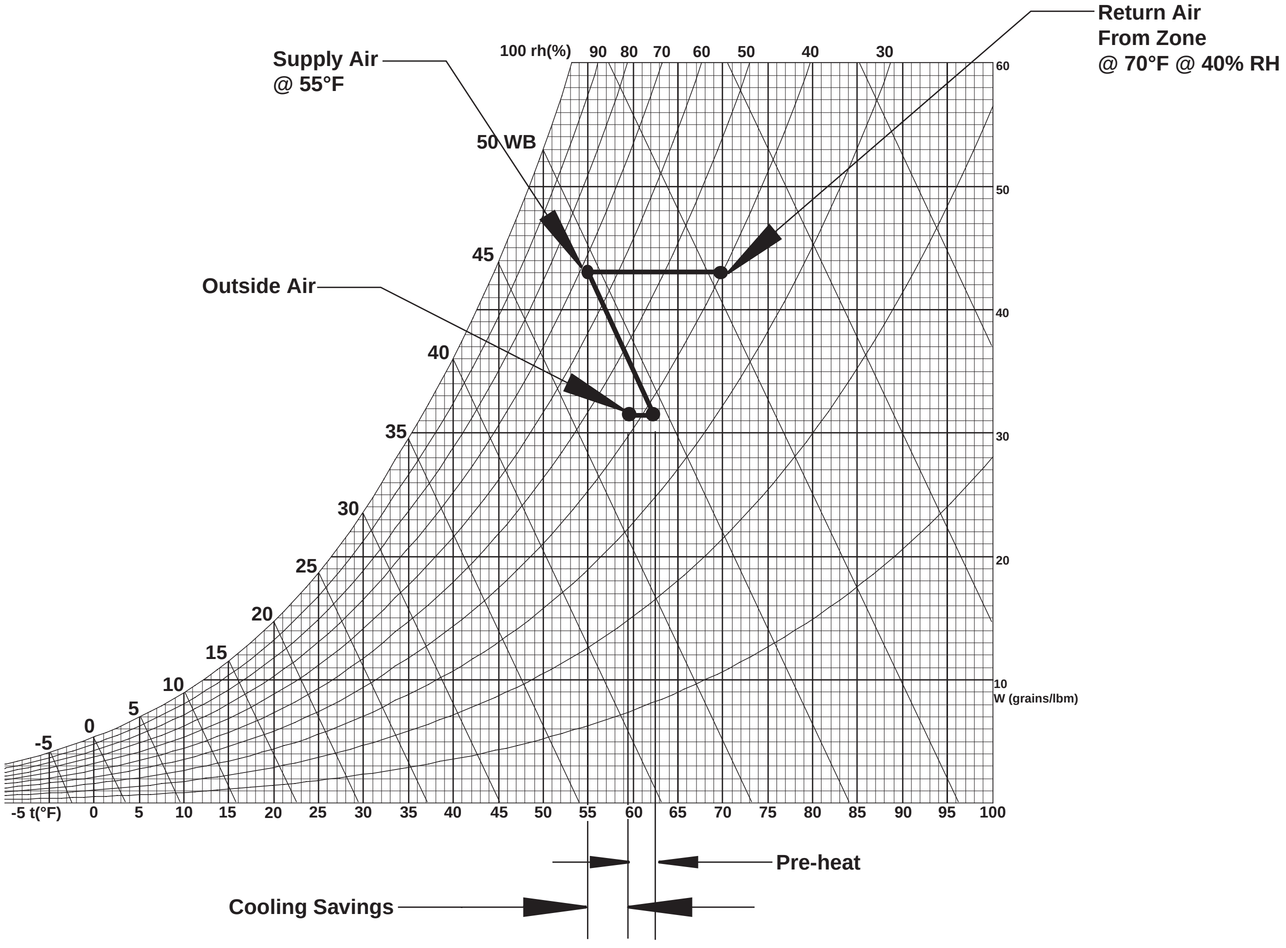

Note: Psychrometric chart representations do not include fan heat gains, duct losses, infiltration losses or cooling coil dehumidification.

5. Pre-Cooling of Inlet Air for Air Cooled Water Coils or Gas Fired Turbines

In hot and dry climates, evaporative pre-cooling of air cooled water coils for industrial process cooling or air conditioning can present the opportunity for substantial energy savings over mechanical refrigeration.

Because the system is only used when excessive outdoor temperatures persist, no preheat is ever required.

The energy saved **for each temperature bin** can be calculated as follows:

+Cost of Equivalent Mechanical Cooling
-Cost of Air Compressor with Armstrong-Cool Fog
=Mechanical Cooling Savings

The psychrometric representation of the water coil pre-cooling savings is as follows: (see Figure 169-1.)

Figure 169-1. Pre-Cooling of Inlet Air for Air Cooled Water Coils or Gas Fired Turbines

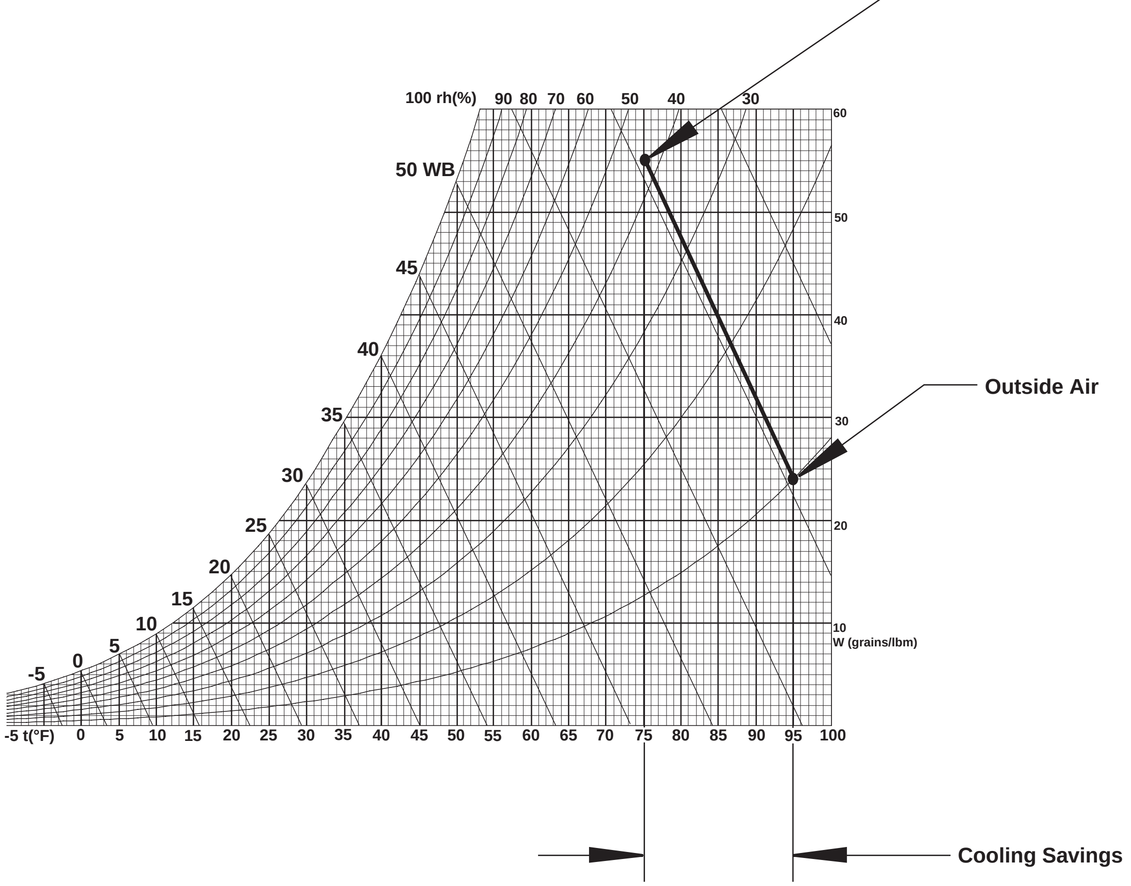

Note: Psychrometric chart representations do not include fan heat gains, duct losses, infiltration losses or cooling coil dehumidification.

Armstrong-Cool Fog System Components

Manifolds with Foggers or Area Foggers:

Manifolds Bars serve to both support the foggers, and supply air and water to the fogger heads. Manifolds are available for:

- Air Handler Discharge (STD or VDC) (Figure 170-1)
  1. Cool Fog (CF) for reverse osmosis or potable water
  2. Pure Fog (PF) for de-ionized water.

- Direct Area Discharge (DDF) (Figure 170-2)
  1. Cool Fog (CF) for reverse osmosis or potable water
  2. Pure Fog (PF) for de-ionized water.

Figure 170-1. Air Handler Discharge

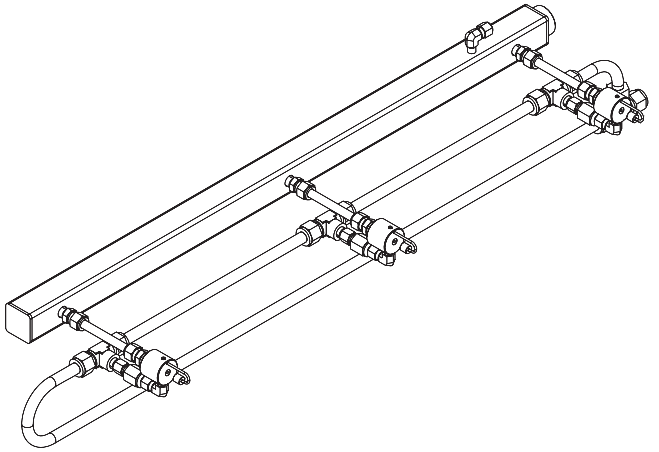

Control Panels:

Control Panels receive a control signal from either a BAS or humidistat, and respond by proportioning air and water valves to maintain the desired output to the fogger manifolds. Control Panels are available as:

Standard Proportional Control (STD)

1. 50:1 proportional control modulation.
2. Fixed air/water pressure output differential.
3. Air handler or duct application.
4. Air feedback controls water pressure output.

Variable Differential Control (VDC)

1. 100:1 proportional control modulation.
2. Variable air/water pressure output differential.
3. Reduced air consumption rates.
4. Air handler or duct application.
5. Air feedback controls water pressure output.

HumidiComp On/Off Control (HC)

1. On/off control
2. Manual air/water pressure differential adjustment.
3. Air handler application.

Direct Area Discharge On/Off Control (DDF)

1. On/off control.
2. Manual air/water pressure differential adjustment.
3. Direct area discharge.

Figure 170-2. Area Discharge

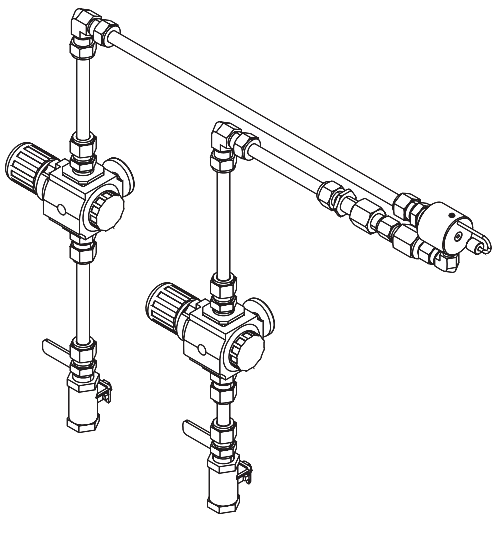

Figure 170-3. Cool Fog Control Panel with Fogger Bar

Air Valves:

Air valves control the air pressure outputs to the manifolds and are available as:

- Proportional for STD or VDC systems.
- On/off for HC or AF systems.

Figure 171-1. Air Valves

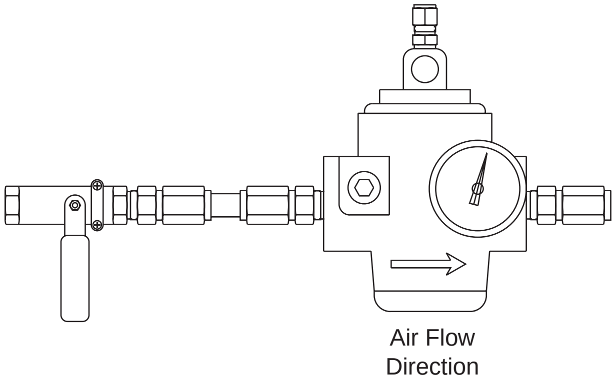

Water Valves:

Water valves control the water pressure outputs to the manifolds and are available as:

- Proportional for STD or VDC systems.
  1. CF for reverse osmosis or potable water.
  2. PF for de-ionized water.

- On/off for HC or DDF systems.
  1. CF for reverse osmosis or potable water.
  2. PF for de-ionized water.

Figure 171-2. Water Valves

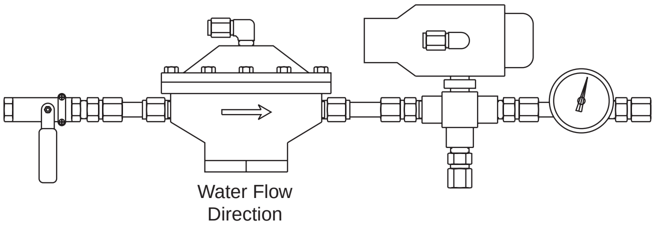

Low Pressure Switches.

Low-pressure switches are used to prevent system operation in the event of water pressure loss.

Figure 171-3. Low Pressure Switches

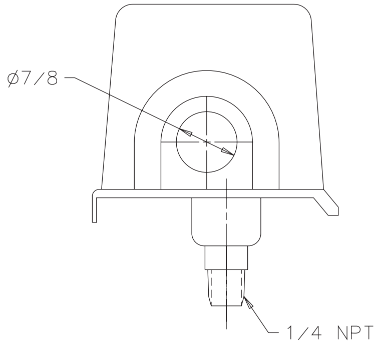

Required Support Systems:

Support systems which are typically supplied by others include:

- Clean compressed air at rated SCFM and constant psig
- Instrument air at rated psig
- Clean pressurized water at rated gpm and constant psig
- Control Signal from a BAS or humidistat.

Armstrong-Cool Fog Complete System Drawings

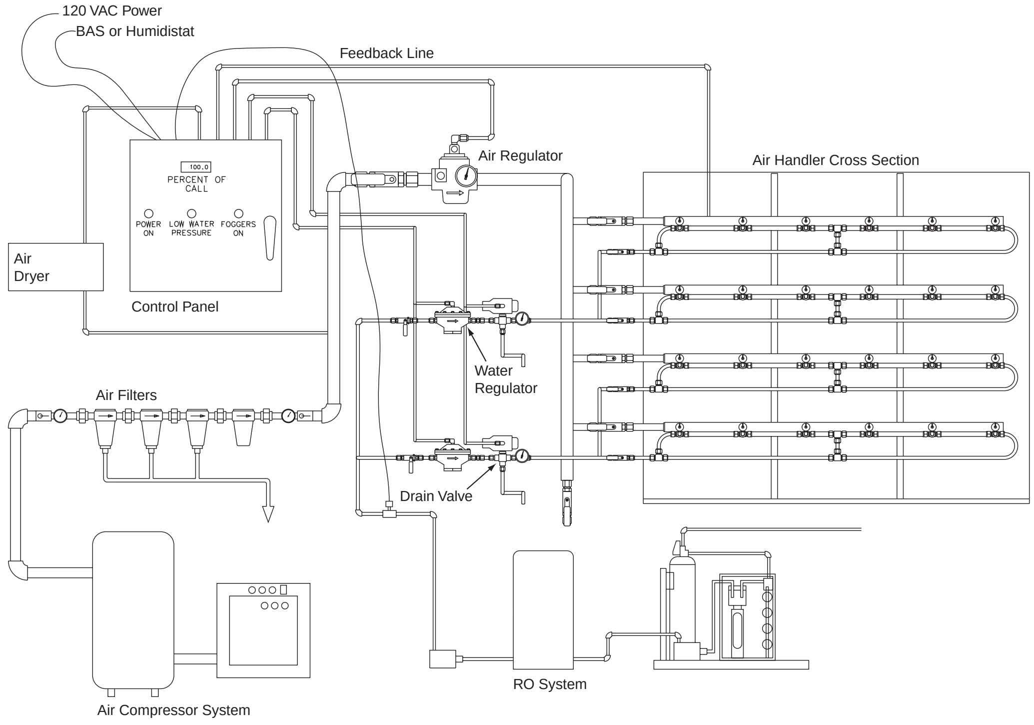

Figure 172-1. Standard Proportional Control (STD) or Variable Differential Control (VDC)

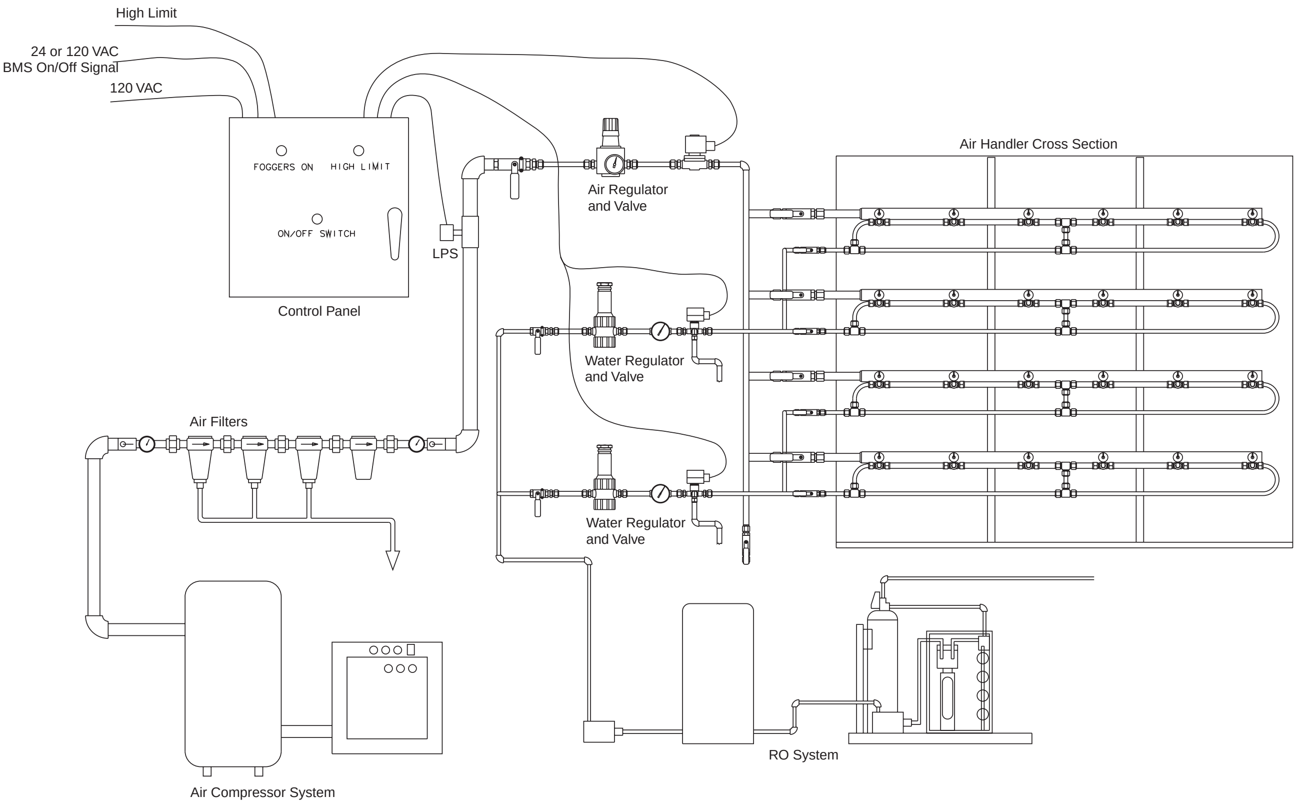

Figure 172-2. HumidiComp On/Off Control (HC)

Figure 173-1. Direct Area Discharge On/Off Control (DDF)

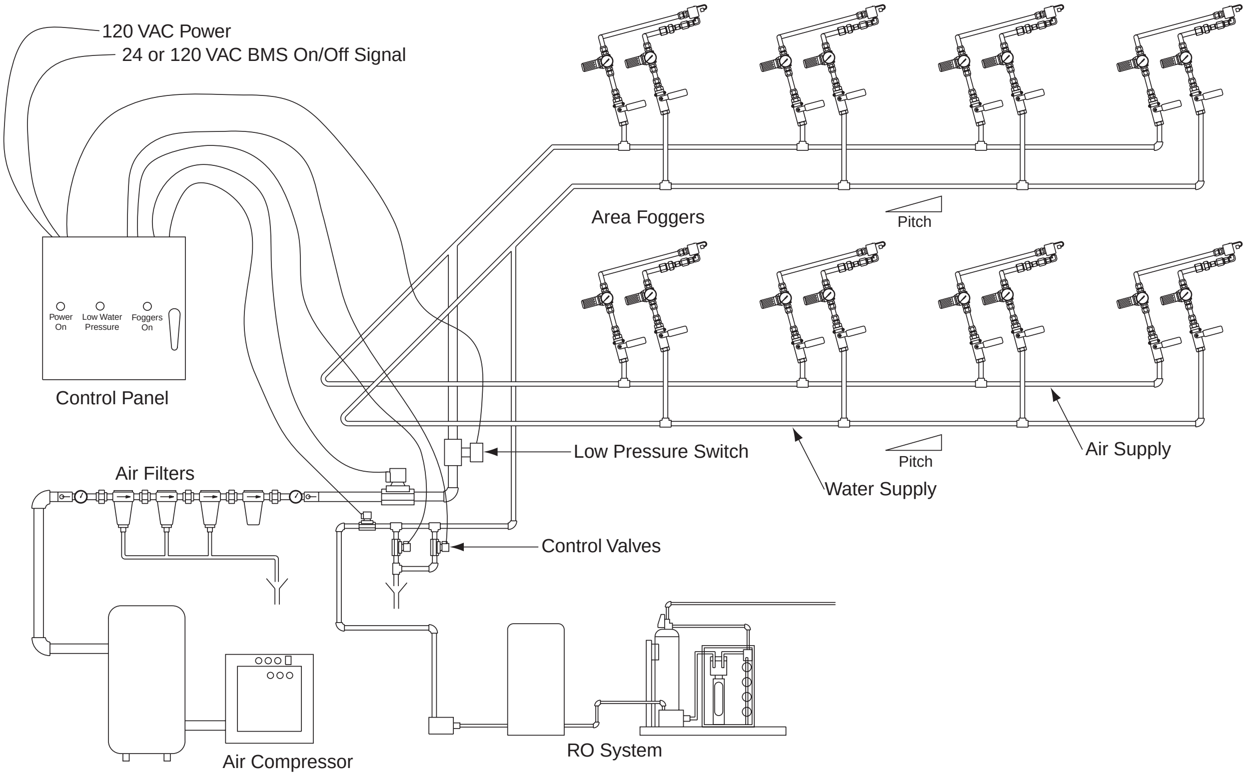

Armstrong-Cool Fog Systems Typical Specification

Specifications may vary per job.

Manufacturers

The Manufacturer shall have at least twenty years of experience in the hydro-pneumatic atomization humidifiers.

Approved Manufacturer: Armstrong International, Inc. of Three Rivers, MI, USA (269) 273-1415 or an approved equal.

Performance

The fog shall evaporate to dryness at an evaporation efficiency of not less than 95%, prior to impinging upon any surface within the fog chamber while delivering its maximum rated capacity of fog with water supplied at ___ PSIG (to the water valve assemblies) and ___ PSIG compressed air (to the air valves). These criteria shall be applicable for each system on the humidifier schedule. Fogging capacities per system will be no less than amounts outlined in the Humidifier Schedule for each air handler unit.

Cool Fog Equipment

3.1 Fogger Heads

Fogger heads shall produce atomized water by injecting pressurized water droplets into a compressed air stream and discharging the mixture against a resonator. All fogger heads and integral parts must be machined 304 or 316 stainless steel and shall have no moving parts. Fogging devices with springs or diaphragms are unacceptable. The 316 stainless steel fogger head shall be secured with breakaway fittings. Each fogger head shall come with a 5-Year warranty.

3.2 Resonator

The 304 stainless steel, one piece, resonator assembly permits on-line pattern adjustment, from doughnut to plume, to achieve cross flow mixing with the receiving air mass. There shall be no moving parts on the resonator assemblies. The resonator plug and standoff shall permit realignment and replacement without removal or replacement of the fogger assembly.

3.3 Orifice

The interchangeable 316 stainless steel orifice shall be capable of generating one pound of fog for each ___SCFM of compressed air consumed at maximum scheduled humidifier capacities.

3.4 Manifolds

Fogger manifold bars shall mount and supply air and water to the fogger heads. All foggers will be equipped with a water check valve with a cracking pressure of .33 psig. Each fogger manifold bar is to be factory assembled by the manufacturer and delivered to either the job site or AHU manufacturer for mounting by others. The fogger manifold bars shall be selected and/or detailed in the Shop Drawings.

3.4.1 For Duct or AHU applications, manifold bar assemblies shall feed multiple fogger heads. An air feedback tap shall be incorporated into one manifold bar to supply an air feed back signal to the modulating control panel. For ON/OFF control panels, no air feedback tap shall be required.

Each fogger manifold bar shall have a secondary water line, for pressure stabilization, that runs parallel to the main water line on each fogger manifold bar.

3.4.2 For Area Applications, manifolds shall be field fabricated and consist of air and water piping between individually supplied fogger head assemblies. Both air and water line connections shall incorporate manually adjustable pressure regulator to maintain a fixed pressure differential to the fogger head.

3.5 Control Systems

3.5.1 Control systems shall incorporate a control panel to control air and water valves in response to a control signal from either a BAS or humidistat.

Standard components for each panel shall include as a minimum

3.5.1.1 On/Off power switch
3.5.1.2 Foggers "ON" indicator.
3.5.1.3 Low supply air pressure safety interlock.
3.5.1.4 Low supply water pressure safety interlock.
3.5.1.5 120 VAC power input.
3.5.1.6 BAS or humidistat input.
3.5.1.7 Air valve output.
3.5.1.8 Water valve output.
3.5.1.9 Drain valve output.
3.5.1.10 NEMA ___ enclosure with wiring terminals.

3.5.2 Standard Proportional Control, (STD) for air handlers

Control Systems shall include necessary components to achieve a turndown ratio of 50:1, in response to a BAS or humidistat control signal, by simultaneous modulation of both air and water pressures to maintain a fixed air-to-water differential over the entire output range without staging.

Staging of Fogger Manifolds to achieve the specified turndown is not acceptable.

Both compressed air and water outputs shall have their own pressure regulating valve(s).

Flow regulating air and water valves shall be unacceptable.

A drain valve shall drain the water line between the water regulator and manifold bar when the system is turned off.

Additional panel components to achieve STD control include:

3.5.2.1 Transducers

One 4-20 mA current-to-pressure (I/P), or one 0-10 vdc voltage-to-pressure (E/P) transducer shall be used for remote modulating operation of the system via a building automation system (BAS) 4-20mA control signal.

Pneumatic instrument air must be supplied for operation of the I/P transducer.

3.5.2.2 Biasing Relay

A biasing relay shall produce a proportional pneumatic signal to the water-regulating valve.

3.5.2.3 Control Logic

A 4-20 mA or 0-10 vdc control signal from a humidistat or BAS is supplied to the I/P or E/P.

The I/P or E/P transducer shall control the air pressure output to the manifolds.

The pneumatic output to the water-regulating valve shall equal the pneumatic feedback from the air manifold minus the spring bias of the biasing relay.

3.5.2.4 LCD panel meter

LCD panel meter to indicate percent of call from BAS or humidistat.

3.5.3 Variable Differential Control, (VDC) for air handlers

The control system shall include components necessary to achieve a turndown of over 100:1 by simultaneous modulation of air and water pressures to produce a proportional air-to-water differential. The air-to-water differential shall be greater at the low end of the control range and lesser at the high end of the control range.

Staging of Fogger Manifolds to achieve the specified turndown shall not be accepted.

Both compressed air and water outputs shall have their own pressure regulating valve(s).

Flow regulating air and water valves shall be unacceptable.

A drain valve shall drain the water line between the water regulator and manifold bar when the system is turned off.

Additional panel components to achieve VDC control include:

3.5.3.1 Transducers
Two 4-20 mA current to pressure (I/P-1 and I/P-2), or two voltage to pressure (E/P-1 and E/P-2), transducers shall be used for remote modulating operation of the system via a building automation system (BAS) 4-20mA control signal.
Pneumatic instrument air must be supplied for operation of the I/P transducer.

3.5.3.2 Biasing Relay
A biasing relay shall produce a proportional pneumatic signal to the water-regulating valve.

3.5.3.3 Control Logic
A 4-20 mA or 0-10 vdc control signal from a humidistat or BAS is supplied to the I/Ps or E/Ps.

The air pressure output to the manifolds shall be controlled by the I/P-1 or E/P-1 transducer.

The pneumatic output to the water-regulating valve shall equal the pneumatic feedback from the air manifold plus the pneumatic input from I/P-2 or E/P-2, minus the spring bias of the biasing relay.

3.5.3.4 LCD panel meter
LCD panel meter to indicate percent of call from BAS or humidistat.

3.5.4 Humidicomp (HC), ON/OFF control for air handlers.
Control Systems shall include necessary components to achieve ON/OFF control in response to a BAS or humidistat control signal.

Both compressed air and water outputs shall have their own solenoid control valve(s) with manually adjustable pressure regulators to maintain a fixed air/water pressure differential to manifold bars.

Flow regulating air and water valves shall be unacceptable.

A drain valve shall drain the water line between the water regulator and manifold bar when the system is turned off.

Additional panel components to achieve HC control include:

3.5.4.1 Switching Relays
A 24 or 120 VAC relay to switch power to the air, water and drain solenoid valves.

3.5.5 Area Fogger (AF), ON/OFF control for direct area discharge.
Control Systems shall include necessary components to achieve ON/OFF control in response to a BAS or humidistat control signal.

Both compressed air and water supply outputs shall have their own solenoid control valve(s).

One normally open and one normally closed drain valve shall be used to provide fail-safe drain back of the water lines between the water solenoid valve and area foggers. In the event of a power loss, the normally open drain valve shall drain all water from between the water solenoid valve and the area foggers.

Additional panel components to achieve AF control include:

3.5.5.1 Switching Relay
A 24 or 120 VAC relay to switch power to the air, water, and NC drain solenoid valves.

3.5.5.2 Timer Switch
To prevent a complete system drain down, a timer switch shall control the operation of the NC drain valve to drain back water from between the water solenoid valve and the area foggers for a predetermined time after loss of ON/OFF signal.

3.5.6 Options

3.5.6.1 Single Input Local Control
A panel mounted, single input, PID humidity controller with programming keypad and LED display shall be installed in the control panel in lieu of remote operation from a BAS or humidistat control signal.

3.5.6.2 Double Input Local Control
A panel mounted, dual input, PID humidity controller with programming keypad and LED display shall be installed in the control panel in lieu of remote operation from a BAS or humidistat control signal.

3.5.6.3 Local and Remote Control
Control panel shall be capable of both remote operation from BAS or humidistat control signal, and local control via Panel mounted controller.

3.5.6.4 Remote Power ON/OFF
A relay shall be panel mounted to remotely turn power on and off to the control panel.

3.6 Materials of Construction

3.6.1 Cool Fog System Type (CF)
When used for potable water service, materials for the fogger manifold bars shall be type L copper tube and brass Swagelock tube fittings. Water valves shall be made of brass.

Each fogger manifold bar shall come with a 2-Year Warranty.

3.6.2 Pure Fog System Type (PF)
For reverse osmosis and de-ionized water service, all wetted parts shall be 316 stainless steel.

Each fogger manifold bar shall come with a 5-Year Warranty.

Required Supports

4.1 Mixed air dampers.
Entering air to fog chamber must be mixed to the wet bulb temperature of the desired supply air.

4.2 Preheat coil.
When fogging air temperatures cannot be cannot be attained by mixing outside air with return air, a pre-heat coil of adequate capacity shall be installed. The temperature of the coil shall be proportionally controlled to maintain the desired supply air temperature after the foggers.

4.3 Cooling coil w/ drain pan or fog eliminator panel.
A cooling coil or fog eliminator panel shall be mounted downstream of the fogger manifold bars.

4.4 Downstream air filter.
When potable water is used, an air filter shall be installed downstream of the cooling coil or fog eliminator panels.

4.5 Fogging chamber.
When the air velocity at the fogger manifolds exceeds 750 FPM, a fogging chamber of adequate height and width to reduce the air velocity shall be installed with a fog eliminator panel and drain pan.

4.6 Clean compressed air.
Clean compressed air of adequate SCFM and PSIG shall be supplied to the air control valve. If required, air compressor(s) shall be oil filled, rotary screw type with 4-stage air filtration and all required controls to provide the constant required PSIG at the required SCFM.

4.7 Pneumatic instrument air.
Clean and dry pneumatic instrument air @ 100 PSIG shall be supplied to the control panel for operation of the I/P or E/P transducer.

4.8 Purified pressurized water supply.
Purified, pressurized water shall be supplied to the water control valve. When the water quality is more than 50 PPM total dissolved solids, or more than 25 PPM hardness, a reverse osmosis water purification plant with carbon pre-filter, water softener and booster pump shall be required.

A water test shall be performed to determine if water purification is required.

4.9 Humidity control signal from BAS or humidistat.
Control of humidity shall be through a control signal from a Building Automation System or Humidistat.

Armstrong-Cool Fog Design Questionnaire No. 1

Sales Representative: ____________________ Date: __________

Project Name: ____________________

Project Location and Elevation: ____________________

Engineering Firm: ____________________ Phone: __________

Engineer Assigned to Project: ____________________ Fax: __________

Number of Fogging Systems Required: ____________________

Air Compressor Required: ☐ Yes ☐ No Available Air Pressure: __________

Is Air Pressure Constant? __________ Is Air Clean and Dry? __________ SCFM Available __________

Water Supply is: ☐ Potable ☐ R.O. ☐ D.I.

Water Analysis is required for potable water and if Armstrong Cool-Fog is supplying R.O. System.

Water Supply Pressure at Humidifier Chamber is: __________ PSI Constant? __________

Building Automation System (BAS) Present: ☐ No ☐ Yes

BAS Signal: ☐ 4-20mA ☐ 0-10Vdc ☐ Other

AREA Description: __________ **(fill out one form for each zone and attach)**

a. Total Area Volume: ____________________

b. Ceiling Heights: ____________________

c. Air Changes/Hour: ____________________

d. CFM Outside Air: ____________________

e. CFM Exhaust Air: ____________________

f. Desired Space DB/WB: ____________________

g. Outside Air DB/WB: ____________________

Please attach a drawing (layout) of the area:

Your estimate of lb/hr humidity required: ____________________

Current lb/hr capacity of existing humidifiers: ____________________ lb/hr

If existing humidifiers, indicate type: ____________________
(electric, steam, oil or gas fired boilers etc.)

Hours of operation per day: ____________________

Energy Cost: __________ Electricity/kw __________ Gas/therm

Type of space to be humidified: ____________________

Requested from Armstrong: ☐ Proposal ☐ Budget ☐ Info Pack ☐ Energy Comparison

☐ Other (please specify): ____________________

Please fax this form to Armstrong Humidification Group
269-273-9500

Armstrong-Cool Fog Design Questionnaire No. 2

Sales Representative: ________ Date: ________
Project Name: ________
Project Location and Elevation: ________
Engineering Firm: ________ Phone: ________
Engineer Assigned to Project: ________ Fax: ________
Number of Fogging Systems Required: ________

Air Compressor Required: ☐ Yes ☐ No Available Air Pressure: ________
Is Air Pressure Constant? ________ Is Air Clean and Dry? ________ SCFM Available ________

Water Supply is: ☐ Potable ☐ R.O. ☐ D.I.
Water Analysis is required for potable water and if Armstrong Cool-Fog is supplying R.O. System.
Water Supply Pressure at Humidifier Chamber is: ________ PSI Constant? ________

Building Automation System (BAS) Present: ☐ No ☐ Yes
BAS Signal: ☐ 4-20mA ☐ 0-10Vdc ☐ Other ________

Air Handler Unit (AHU) Designation: ________
a) AHU CFM: ________ AHU Type: ________ Economizer: ________
Constant Volume: ________ VAV: ________ Makeup ________
b) Fog Chamber Dimensions: ________ W ________ H ________ L
c) Preheat Available? ________
d) Fog Chamber Location: ________
e) Minimum % of Outside Air: ________ Maximum % of Outside Air: ________
f) Desired Space DB/WB Set Point: ________ %
g) Entering Air DB/WB Conditions (into AHU) ________
h) Leaving Air DB/WB Conditions (supply form AHU) ________
i) Entering Air DB/WB Conditions (into fog chamber) ________
j) Leaving Air DB/WB Conditions (leaving fog chamber) ________
k) AHU Control is: ☐ Discharge Temp. ☐ Enthalpy ☐ Mixed Air ☐ Other ________

Please attach a drawing (layout) of the AHU(s):
Your estimate of lb/hr humidity required: ________
Current lb/hr capacity of existing humidifiers: ________ lb/hr
If existing humidifiers, indicate type: ________
(electric, steam, oil or gas fired boilers etc.)

Hours of operation per day: ________
Energy Cost: ________ Electricity/kw ________ Gas/therm
Type of space to be humidified: ________
Requested from Armstrong: ☐ Proposal ☐ Budget ☐ Info Pack ☐ Energy Comparison
☐ Other (please specify): ________

Please fax this form to Armstrong Humidification Group
269-273-9500

Limited Warranty and Remedy

Armstrong International, Inc. ("Armstrong") warrants to the original user of those products supplied by it and used in the service and in the manner for which they are intended, that such products shall be free from defects in material and workmanship for a period of one (1) year from the date of installation, but not longer than 15 months from the date of shipment from the factory, [unless a Special Warranty Period applies, as listed below]. This warranty does not extend to any product that has been subject to misuse, neglect or alteration after shipment from the Armstrong factory. Except as may be expressly provided in a written agreement between Armstrong and the user, which is signed by both parties, Armstrong **DOES NOT MAKE ANY OTHER REPRESENTATIONS OR WARRANTIES, EXPRESS OR IMPLIED, INCLUDING, BUT NOT LIMITED TO, ANY IMPLIED WARRANTY OF MERCHANTABILITY OR ANY IMPLIED WARRANTY OF FITNESS FOR A PARTICULAR PURPOSE.**

The sole and exclusive remedy with respect to the above limited warranty or with respect to any other claim relating to the products or to defects or any condition or use of the products supplied by Armstrong, however caused, and whether such claim is based upon warranty, contract, negligence, strict liability, or any other basis or theory, is limited to Armstrong's repair or replacement of the part or product, excluding any labor or any other cost to remove or install said part or product, or at Armstrong's option, to repayment of the purchase price. As a condition of enforcing any rights or remedies relating to Armstrong products, notice of any warranty or other claim relating to the products must be given in writing to Armstrong: (i) within 30 days of last day of the applicable warranty period, or (ii) within 30 days of the date of the manifestation of the condition or occurrence giving rise to the claim, whichever is earlier. **IN NO EVENT SHALL ARMSTRONG BE LIABLE FOR SPECIAL, DIRECT, INDIRECT, INCIDENTAL OR CONSEQUENTIAL DAMAGES, INCLUDING, BUT NOT LIMITED TO, LOSS OF USE OR PROFITS OR INTERRUPTION OF BUSINESS.** The Limited Warranty and Remedy terms herein apply notwithstanding any contrary terms in any purchase order or form submitted or issued by any user, purchaser, or third party and all such contrary terms shall be deemed rejected by Armstrong.

Special Warranty Periods are as follows:

Series EHU-700 Electric Steam Humidifier, Series HC-6000 HumidiClean Humidifier and GFH Gas Fired Humidifier with Ionic Beds:
Two (2) years after installation, but not longer than 27 months after shipment from Armstrong's factory.

A visit to Armstrong's new Web site will provide guests with an enjoyable experience. Completely reorganized and expanded, the site makes it possible to review online every Armstrong product, service and system solution by industry. Product literature and technical specifications are available as downloads, as are CAD drawings. Requests for quotes are also available for more than 20 product families. Armstrong is recognized around the world for its intelligent system solutions for steam, air and hot water. Stop by today to learn more!

http://www.armstronginternational.com

How far will your energy take you?

Solutions from Armstrong.
No matter where your energy takes you.

System Solutions
Armstrong has decades of experience with utility system solutions. To learn how we've helped partners around the world, click here.

Industry Solutions
Armstrong has proved again and again that it understands the specific needs of individual industries. To learn more, click here.

Service Solutions
Flexibility. Innovation. Initiative.
To learn how we can craft a highly individual approach for you, click here.

What's New: Armstrong engineer Bob Jones publishes white paper on humidification. ||| Revised All Products Catalog due in August. |||

Armstrong launches Steam Eye steam trap monitoring system at sales meeting. Dolor voulut set morus amet.

Acme Corporation joins Armstrong family of companies. Lorem Ispum dolor sit woulut set

New hot water installation in France scheduled for start-up in January. Voulpot dolor sit soulut set.

© 2005 Armstrong International, Inc.

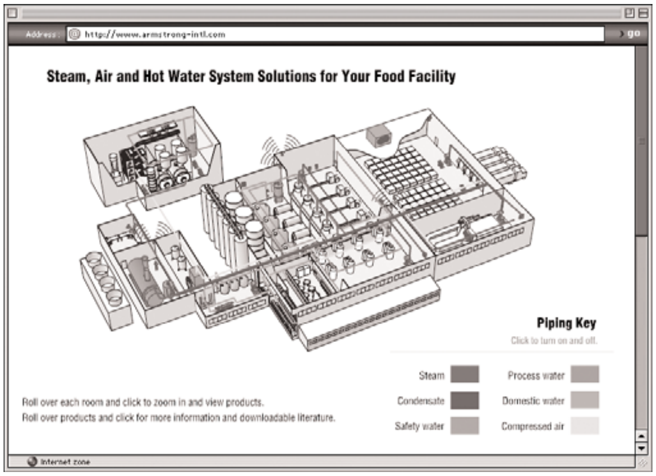

Steam, Air and Hot Water System Solutions for Your Food Facility

Roll over each room and click to zoom in and view products.
Roll over products and click for more information and downloadable literature.

Interactive Food Plant Tour
Take Armstrong's interactive tour of a typical food plant, and you'll get an overview of how utility systems function in a processing facility.

Learn about Intelligent System Solutions at www.armstrong-intl.com

- System Solutions. Armstrong System Solutions are more than the sum of their parts. At Armstrong, it is the system that solves—and saves.
- Product Solutions. Every system solution begins with a smart, practical product that solves a problem. Hard-working products are at the heart of every Armstrong solution in steam, air or hot water.
- Service Solutions. Finally, the talent, personnel and financing to affordably optimize your utility operation—Armstrong Service will work with you to assess your system and identify your needs.
- Industry Solutions. The power of world-class energy expertise zeroes in on industry-specific targets. A longtime player in key global businesses, Armstrong understands the specific challenges of individual industries.

Armstrong University

At Armstrong, “Knowledge Not Shared Is Energy Wasted®” has been a theme and a way of life for years. For us, it’s how we go about our business, how we build relationships with customers and solve problems—both inside and outside the company.

For you, it’s a promise. It’s our pledge to use what we know to make your business more efficient, more profitable and more rewarding. In many ways, Armstrong University is the capstone for a tradition of knowledge-sharing.

It is certainly the most ambitious and comprehensive effort we’ve ever undertaken. That’s why we’re using “Knowledge Not Shared Is Energy Wasted” as both a motto and a statement of purpose for Armstrong University.

Whether you prefer to learn online or by participating in a seminar at one of our worldwide, fully equipped training centers, you’re encouraged to enroll today.

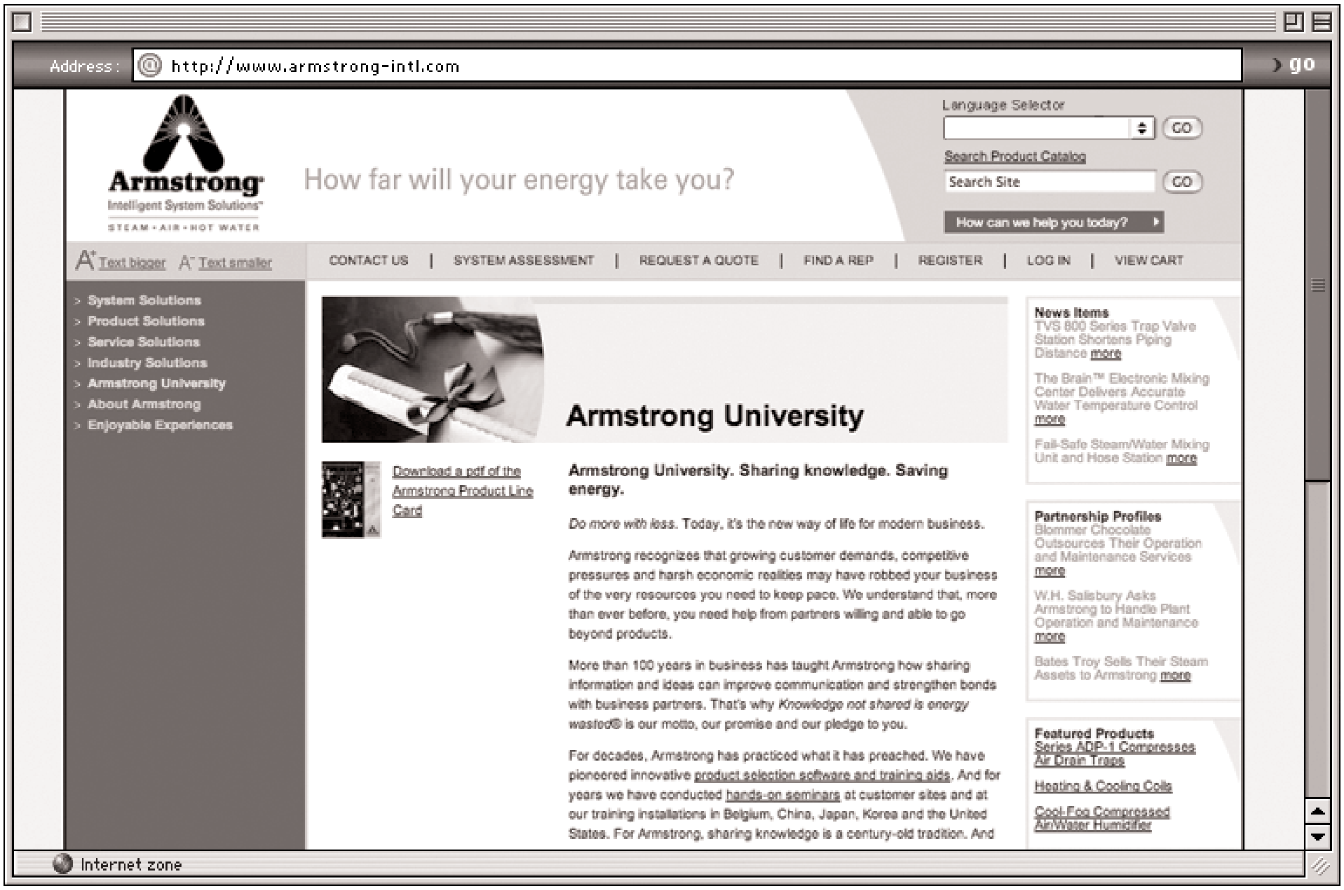

Armstrong University

Download a pdf of the Armstrong Product Line Card

Armstrong University. Sharing knowledge. Saving energy.

Do more with less. Today, it’s the new way of life for modern business.

Armstrong recognizes that growing customer demands, competitive pressures and harsh economic realities may have robbed your business of the very resources you need to keep pace. We understand that, more than ever before, you need help from partners willing and able to go beyond products.

More than 100 years in business has taught Armstrong how sharing information and ideas can improve communication and strengthen bonds with business partners. That’s why *Knowledge not shared is energy wasted®* is our motto, our promise and our pledge to you.

For decades, Armstrong has practiced what it has preached. We have pioneered innovative product selection software and training aids. And for years we have conducted hands-on seminars at customer sites and at our training installations in Belgium, China, Japan, Korea and the United States. For Armstrong, sharing knowledge is a century-old tradition. And

News Items
TVS 800 Series Trap Valve Station Shortens Piping Distance more

The Brain™ Electronic Mixing Center Delivers Accurate Water Temperature Control more

Fail-Safe Steam/Water Mixing Unit and Hose Station more

Partnership Profiles
Blommer Chocolate Outsources Their Operation and Maintenance Services more

W.H. Salisbury Asks Armstrong to Handle Plant Operation and Maintenance more

Bates Troy Sells Their Steam Assets to Armstrong more

Featured Products
Series ADP-1 Compressed Air Drain Traps

Heating & Cooling Coils

Cool-Fog Compressed Air/Water Humidifier

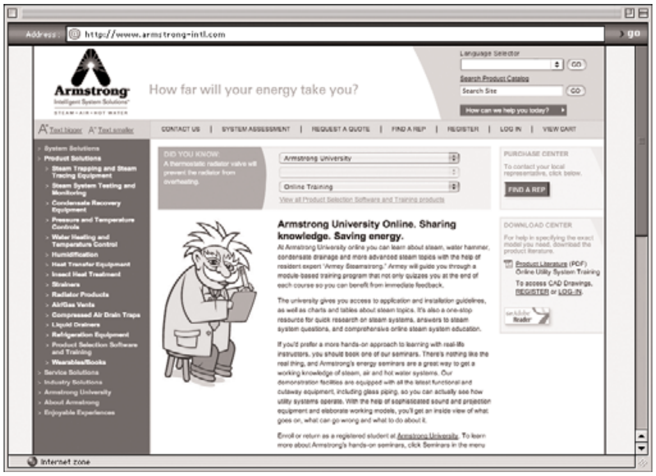

DID YOU KNOW:
A thermostatic radiator valve will prevent the radiator from overheating.

To contact your local representative, click below.

Armstrong University Online. Sharing knowledge. Saving energy.

At Armstrong University online you can learn about steam, water hammer, condensate drainage and more advanced steam topics with the help of resident expert “Armey Steamstrong.” Armey will guide you through a module-based training program that not only quizzes you at the end of each course so you can benefit from immediate feedback.

The university gives you access to application and installation guidelines, as well as charts and tables about steam topics. It’s also a one-stop resource for quick research on steam systems, answers to steam system questions, and comprehensive online steam system education.

If you’d prefer a more hands-on approach to learning with real-life instructors, you should book one of our seminars. There’s nothing like the real thing, and Armstrong’s energy seminars are a great way to get a working knowledge of steam, air and hot water systems. Our demonstration facilities are equipped with all the latest functional and cutaway equipment, including glass piping, so you can actually see how utility systems operate. With the help of sophisticated sound and projection equipment and elaborate working models, you’ll get an inside view of what goes on, what can go wrong and what to do about it.

Enroll or return as a registered student at Armstrong University. To learn more about Armstrong’s hands-on seminars, click Seminars in the menu

For help in specifying the exact model you need, download the product literature.

Product Literature (PDF)
Online Utility System Training

To access CAD Drawings, REGISTER or LOG-IN.

Check out what else you can do on the AU Campus:

- Enroll in “Undergraduate” and “Graduate” courses that lead you through theory and system operation, installation, and maintenance. Pay close attention; there is a quiz after each course!
- Access and learn via our vast library of video, animation and technical information.
- Explore Armstrong’s unparalleled information library using our search engine.
- Use online calculators to determine steam loss, flash steam and annual savings by returning condensate.

Facility Locations

Armstrong International, Inc.

2081 SE Ocean Boulevard
4th Floor
Stuart, FL 34996-3376
Phone: (561) 286-7175
Fax: (561) 286-1001
www.armstronginternational.com

Steam and Condensate Group

816 Maple Street
Three Rivers, MI 49093
Phone: (269) 273-1415
Fax: (269) 278-6555
www.armstronginternational.com
Steam Trapping and Steam Tracing Equipment/
Testing and Monitoring/Strainers/Air Vents/Liquid Drainers

Humidification Group

816 Maple Street
Three Rivers, MI 49093
Phone: (269) 273-1415
Fax: (269) 273-9500
www.armstronginternational.com
Steam Humidifiers/Gas Fired Steam Humidifiers/Electric
Steam Humidifiers/Manifolds/Fogging Systems

Hot Water Group

221 Armstrong Boulevard
Three Rivers, MI 49093
Phone: (269) 279-3600
Fax: (269) 273-8656
www.armstronginternational.com
Mixing Valves/Hose Stations/Hot Water Heaters/Balancing
Valves/Radiator Products

Pressure/Temperature Controls Group

221 Armstrong Boulevard
Three Rivers, MI 49093
Phone: (269) 279-3600
Fax: (269) 273-8656
www.armstronginternational.com
Pressure Reducing Valves/Temperature Regulators

Condensate Management Group

221 Armstrong Boulevard
Three Rivers, MI 49093
Phone: (269) 279-3601
Fax: (269) 279-3150
www.armstronginternational.com
Condensate Recovery Equipment

Heat Transfer Group

648 Moeller Street
Granby, Quebec J2G 8N1 Canada
Phone: (450) 378-2655
Fax: (450) 375-3787
www.armstronginternational.com
Heating and Cooling Coils/Unit Heaters/Tank Heaters

Armstrong Service, Inc.

8545 Commodity Circle
Orlando, FL 32819
Phone: (407) 370-3301
Fax: (407) 370-3399
www.armstrongservice.com

Armstrong International, S.A.

Parc Industriel Des Hauts-Sarts
B-4040 Herstal
Liege, Belgium
Phone: (32) (42) 40.90.90
Fax: (32) (42) 48.13.61
www.armstronginternational.eu

Beijing Kangsen-Armstrong Machinery Co. Ltd.

Guang Mao Avenue
Daxing Industrial Development Zone
Beijing 102600, P.R. China
Phone: (86) (10) 6925-0755
Fax: (86) (10) 6925-0761
www.armstrong.com.cn

Yoshitake-Armstrong, Inc.

955-5, Miyamae Irukadesinden
Komaki, Aichi, 485
Japan
Phone: (81) (568) 75-7551
Fax: (81) (568) 75-7563
www.yoshitake.co.jp

Sign-Up Form

Armstrong®

Ordering Information

Name: ____________________

Title: ____________________

Company Name: ____________________

Street Address: ____________________

City/State/ZIP: ____________________

Phone Number: ____________________ Fax Number: ____________________

E-mail Address: ____________________

Please send me the following for a free 30-day preview:

☐ Training Aids Sampler Kit

Please send me the following sizing and selection software at no charge:

☐ Please send me this catalog on CD-ROM which includes Armstrong's Humid-A-ware™ Sizing and Selection Software. Bulletin 594.

☐ Steam-A-ware™ Sizing and Selection Software
Steam-A-ware sizing and selection for steam, air and hot water systems. Includes steam traps, pressure reducing valves, control valves, temperature regulators and water heaters of various types, sizes and configurations for any application. Easy-to-use Steam-A-ware allows you to store multiple product specifications in a schedule and access Armstrong's library of materials from the CD or the Web.

☐ Coil-A-ware™ Coil Sizing and Selection Software

☐ Please send me information regarding Armstrong's Humidification Seminars.

☐ Please send me information regarding Armstrong Steam University Live Seminars.

For pricing on videotapes, flip charts and sectional models, call Armstrong's Marketing Department at (269) 273-1415
or e-mail marketing@armstronginternational.com.

Humidifier Installation and Maintenance Bulletin Listing

Installation & Maintenance Bulletin No.	Product Description
544	9000 Series Humidifiers with Manifold
549	DSA/FSA/VSA
534	Unfired Steam Generator
544	9000 Series Humidifiers, Air Operated
544	9000 Series Humidifiers, Elec. Operated
544	1000 Series SS Humidifiers
544	SteamStik™
52	Honeywell MP-953-B Operator
63	Solenoid Operated Humidifiers
53	Armstrong C-1801 Operator
60	Duct Hygrostat, High Limit
560	HumidiPack
560	HumidiPack Plus
560	HumidiPack CF
87	CS-10 Series Humidifiers
87	CS-14-C Series Humidifiers
87	CS-15 Series Humidifiers
61	Pneumatic Temp Switch
98	SJDT Steam Jacketed Dispersion Tube
548	Gas Fired HumidiClean
527	EHU-700 Series Humidifiers
96	EHF-2 Fan Package
95	EHF-3 Fan Package
539	HC-6000 HumidiClean
98	SJDT Steam Jacketed Dispersion Tube

Model Number Index

Armstrong® Model Number Index, continued…

GFH Gas-Fired HumidiClean™ with Ionic Beds

GAS-FIRED HUMIDICLEAN™ WITH IONIC BED TECHNOLOGY

Operating costs are reduced with the GFH Series Gas-Fired HumidiClean humidifier from Armstrong. HumidiClean's innovative Ionic Bed Technology reduces operating costs even more by reducing the labor and downtime associated with cleaning humidifiers. The GFH Series uses natural gas or propane for economical operation. And the HumidiClean is designed for ease of use; it's adaptable to various water qualities, and service life cycle and tank drainage are field-adjustable. The GFH Series is CSA-certified and CGA-approved.

ManiPack

MANIPACK

Armstrong ManiPack is a pre-assembled, steam jacketed, distribution manifold bank made specifically for air handling units. The ManiPack is for applications that require a direct steam injection humidifier such as the Series 9000 or 1000. Designed for economy and ease of installation, the ManiPack includes convenient mounting tabs for easy attachment, optional all stainless design for D.I. service, no black iron piping and standard interchangeable parts.

Steam Jacketed Dispersion Tube

STEAM JACKETED DISPERSION TUBE (SJDT)

The Armstrong SJDT is an all stainless steel dispersion tube with the unique ability to accept steam from atmospheric steam-generating humidifiers. The SJDT uses a portion of the steam to "jacket" the entire length of the tube, keeping the dispersion tube hot, even during periods of low demand. This "jacketing" effect improves the quality of steam discharge and reduces the chance for spitting or dripping in your air handling system. The SJDT will accept steam from:

- EHU
- Steam-to-Steam
- Gas-Fired
- HumidiClean

HumidiPackPlus®

HUMIDIPACK®, HUMIDIPACKPLUS® AND HUMIDIPACK CF®

A prefabricated steam humidifier system, the Armstrong HumidiPack® comes ready for insertion into the duct. For use on pressurized steam, the system includes a steam control valve, strainer, steam trap and header drain trap. The HumidiPack accepts steam, separates entrained moisture from it and admits it into a duct or air handler airstream via the dispersion tube. HumidiPackPlus® combines a shortened non-wetting distance with steam-jacketed "active" tubes. The result is a dry, uniform discharge of steam for nearly any application with a steam source from a pressurized central supply.

HUMID-A-WARE™ SOFTWARE

For detailed information on customizing humidification schedules and calculating non-wetting distances and humidification loads, refer to Armstrong's Humid-A-ware humidification sizing and selection software. It can be downloaded from Armstrong's Web site at www.**armstrong**international.com.

WEB SITE

For nearly 100 years in the steam business, Armstrong has been devoted to building stronger bonds through the sharing of information and ideas. That's why *Knowledge Not Shared Is Energy Wasted®* is our motto, promise and pledge to you. And it's why we founded Armstrong Steam University.™ Use this site for quick research on steam, answers to steam system questions and comprehensive online steam system education. Access www.**armstrong**international.com.

How Armstrong Reduces Humidifier Maintenance

IONIC BEDS STOP SOLIDS

Ionic beds consist of a fibrous medium that attracts solids from the water as its temperature rises, minimizing the buildup of solids on the heat exchanger and inner tank walls. Once the ionic beds have absorbed their capacity of solids, an indicator on the humidifier's control panel signals it's time to replace the ionic beds. Changing the beds takes only about 15 minutes. Use of the ionic beds:

- Reduces cleaning of the tank exchanger or heating elements
- Keeps the drain screen cleaner longer – allowing effective tank blowdown
- Maintains humidifier output without building excessive heat exchanger surface temperatures
- Requires less frequent blowdown, conserving water and energy
- Eliminates the need for wasteful surface skimmers
- Reduces downtime
- Has years of field-proven success in thousands of humidifier applications

BETTER HERE THAN IN YOUR HUMIDIFIERS

These photos show how the ionic bed fibers (magnified 52.5x) collect solids throughout their service life. A new ionic bed weighs between 1/3 and 1/2 pound, depending on the humidifier type. When it reaches its capacity, an ionic bed may weigh more than 2-1/2 pounds.

New ionic bed

After 400 hours

After 800 hours

Armstrong Humidification Group
816 Maple Street, Three Rivers, Michigan 49093 – USA Phone: (269) 273-1415 Fax: (269) 273-9500

www.armstrong-intl.com

Printed in U.S.A.